emtest / TESEQ / MILMEGA / jfi

AMETEK®
COMPLIANCE TEST SOLUTIONS

LATEST NEWS FROM ISO 7637-2, -3 AND -4

FRANK NIECHCIAL (04 + 05.06.2019)

THE WORLD'S SPEED IS OUR BEAT

AMETEK in a glimpse

- Diversified manufacturer with 2017 sales of US $4.3 billion
- 50% of sales are outside the United States
- Employs more than 14,500 colleagues worldwide
- Operates more than 100 manufacturing facilities and 100 sales and service centers in the United States and 40 other countries
- New York Stock Exchange listed since 1930 (symbol: AME)
- Component of the S&P 500 index

AMETEK overview

AMETEK COMPLIANCE TEST SOLUTIONS (CTS)

The Markets AMETEK Serves

0
3d.com
le Power p. 17
nablepower.com
Fluid Management Systems p. 9
ensors.com
nts p. 17
nents.com

ERTIES

Power and Compliance Test Instruments

Compliance Test Solutions–EM Test p. 16
www.emtest.com
Compliance Test Solutions–
Teseq, Milmega, IFI p. 16
www.teseq.com
Programmable Power p. 17
www.programmablepower.com

Scientific Instruments

Princeton Applied Research p. 13
www.princetonappliedresearch.com
Reichert Technologies p. 21
www.reichert.com
Signal Recovery p. 13
www.signalrecovery.com
Solartron Analytical p. 13
www.solartronanalytical.com

Ultra High Precision

AMETEK COMPLIANCE TEST SOLUTIONS (CTS)

THE POWER OF FOUR BRANDS.

Under the roof of AMETEK CTS, we have a powerful four-cylinder engine. Our customers can rejoice about having such a powerful advantage. With our combined experience and superior team spirit, together we will solidify our share of the market and go on to conquer new markets.

Together we are strong.
Our behavior on the market, toward our customers and each individual we encounter is one of prompt, thoughtful, and committed response and action. Our relationship to each other is characterized by mutual respect and team spirit. We are united in the convicti-on that the symbiosis of four independent brands un-der the name AMETEK CTS will be a continuing source of strength to fuel our drive for excellence. Each one of us contributes to this goal.

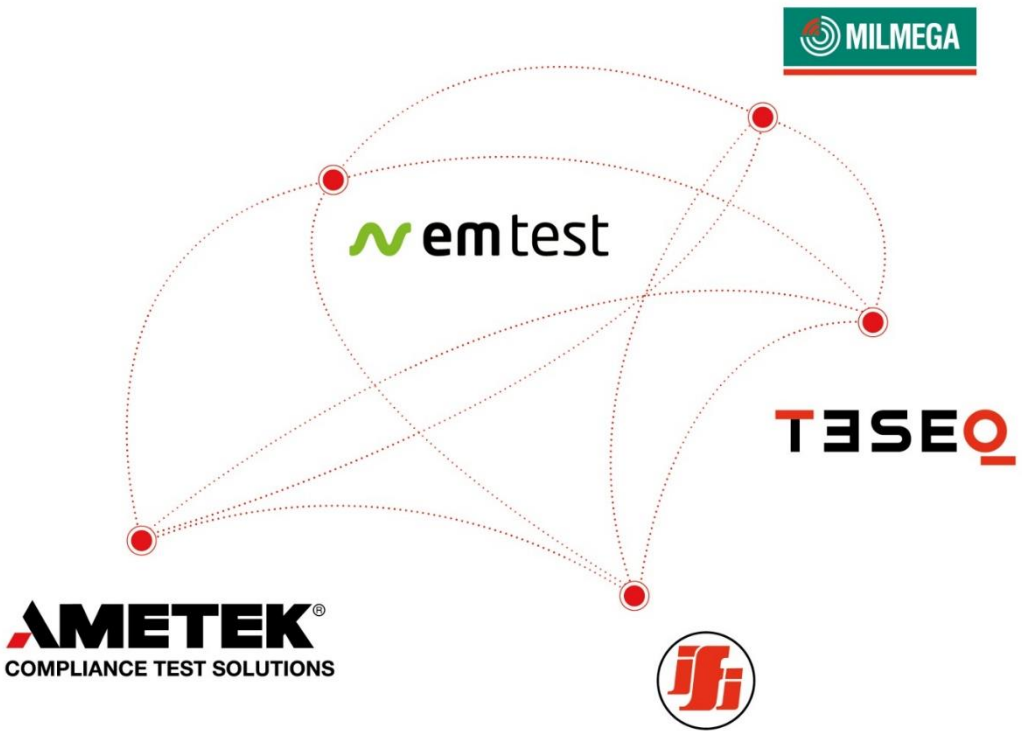

INTRODUCTION

WHAT IS EMC? -> AT LEAST A GOOD QUESTION…

emtest / TESEQ / MILMEGA / JFI

AMETEK®
COMPLIANCE TEST SOLUTIONS

ISO 7637-2 (EDITION3 2011-03)

ROAD VEHICLES – ELECTRICAL DISTURBANCES FROM CONDUCTION AND COUPLING – PART 3: ELECTRICAL TRANSIENT CONDUCTION ALONG SUPPLY LINES ONLY

FRANK NIECHCIAL

04.06.2019

THE WORLD'S SPEED IS OUR BEAT

CONDUCTED EMC (AUTOMOTIVE)

INTERNATIONAL STANDARD ISO 7637-2:2011(E)

Road vehicles — Electrical disturbances from conduction and coupling —

Part 2:
Electrical transient conduction along supply lines only

1 Scope

This part of ISO 7637 specifies test methods and procedures to ensure the compatibility to conducted electrical transients of equipment installed on passenger cars and commercial vehicles fitted with 12 V or 24 V electrical systems. It describes bench tests for both the injection and measurement of transients. It is applicable to all types of road vehicles independent of the propulsion system (e.g. spark ignition or diesel engine, electric motor).

TRANSIENT EMISSION SLOW

Application

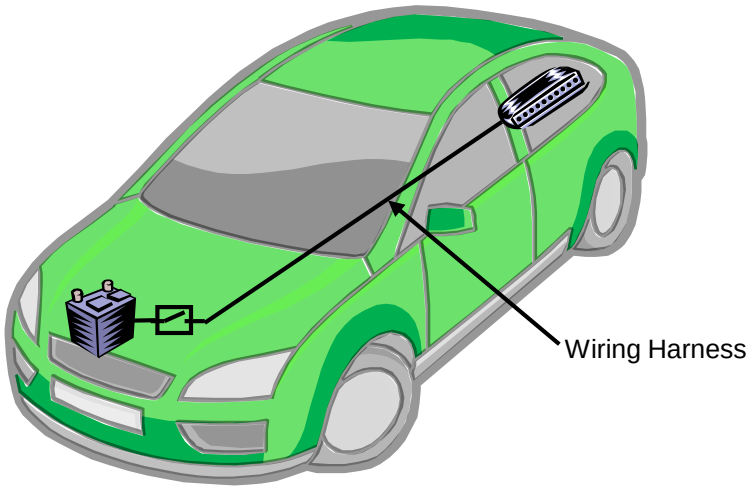

For applications where the DUT is far from the switch, the setup should have the AN between the switch (simulating the wiring harness) and the DUT.

“Slow Pulse Setup”

Test Setup

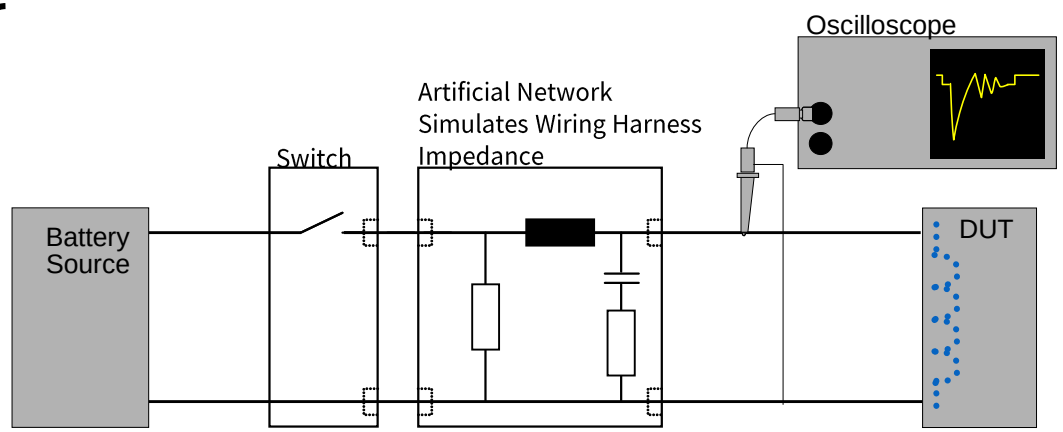

TRANSIENT EMISSION FAST

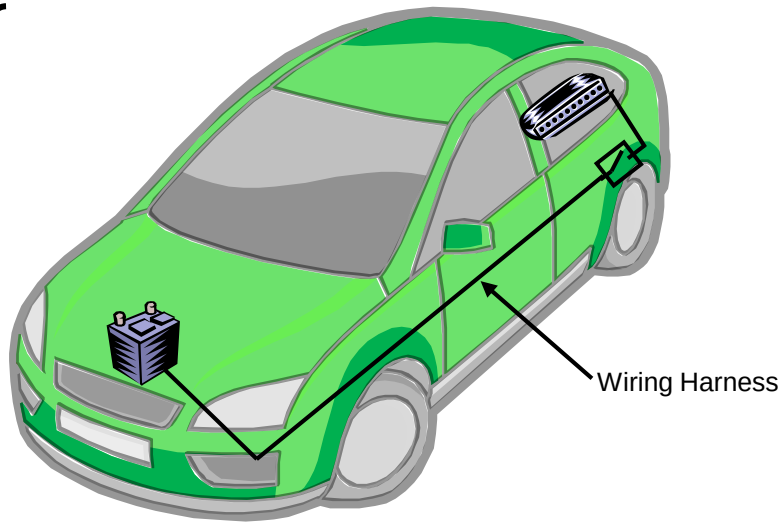

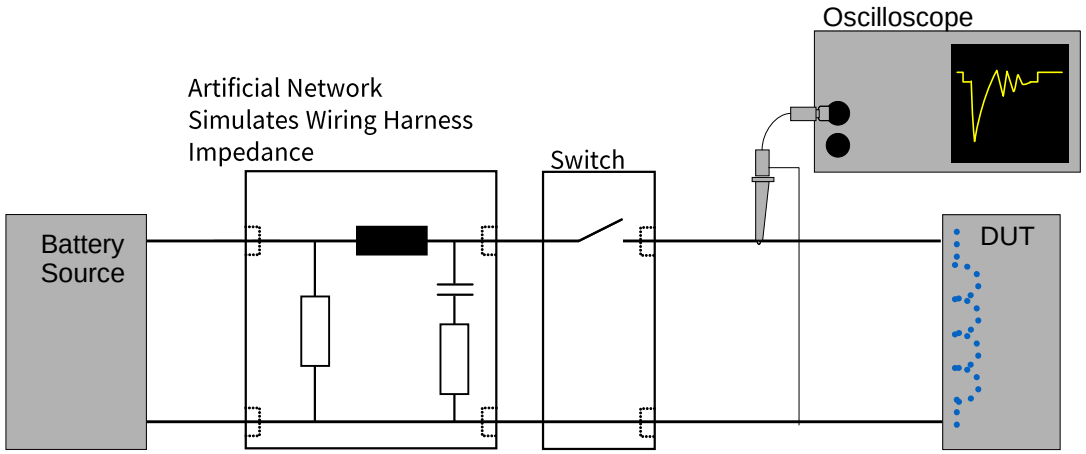

TRANSIENT EMISSION SETUP

04.06.2019

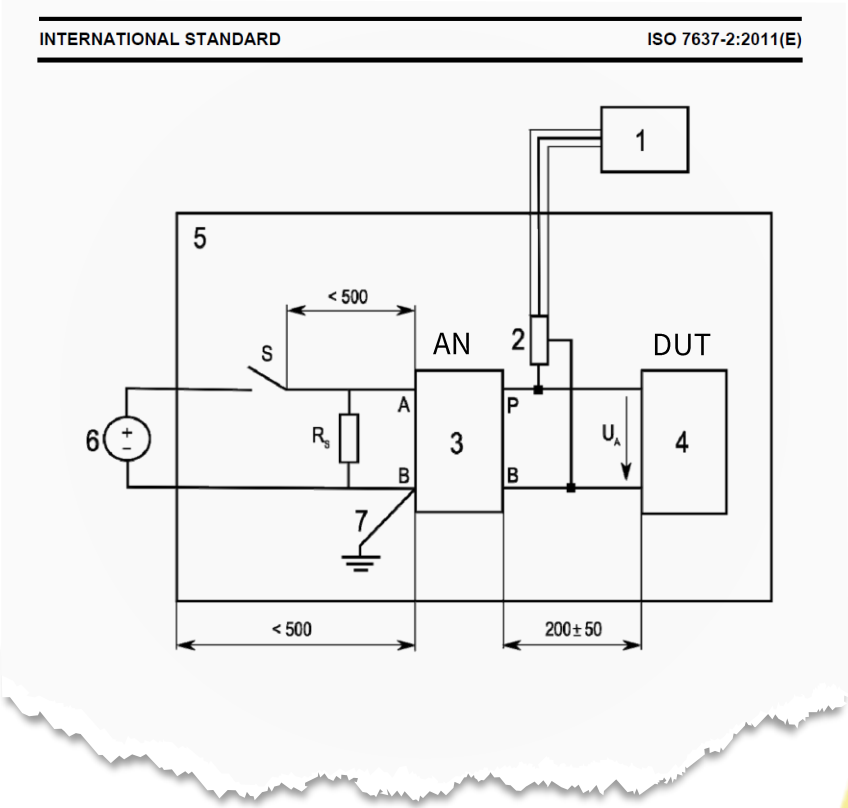

"Slow Pulse" Setup

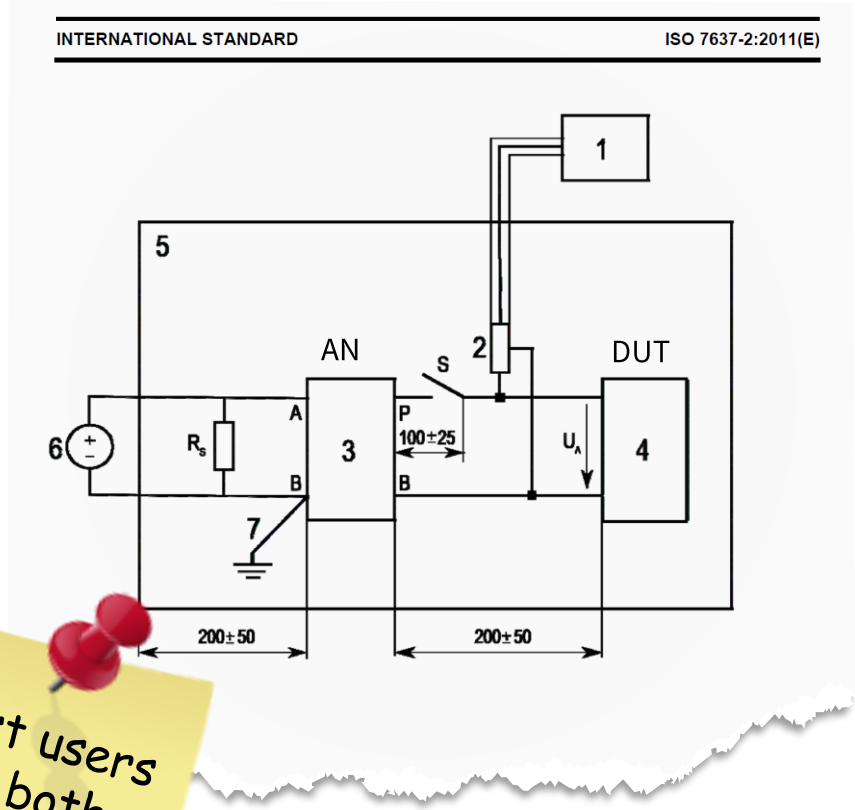

"Fast Pulse" Setup

Most users test both setups.

TRANSIENT EMISSION SWITCH

When to use a relay and when the electronic switch:

Relay

- Voltages over 400V
- Usually must be approved by OEM
- Poor Repeatability, Slow/Chattering
- Must be replaced
- Should be production relay
  from the vehicle containing the DUT

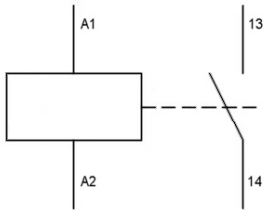

Electronic Switch (E1)

- Less than 400V
- Fast and Repeatable
- Voltage Drop Must be Accounted For
  $\Delta U \leq 1V$ at 25 A

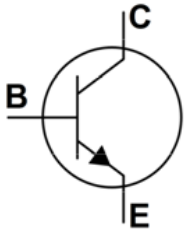

IMMUNITY ON BATTERY LINES

Pulse 1 - A simulation of transients due to supply disconnection from inductive loads; it applies to a DUT if as used in the vehicle, it remains connected directly in parallel with an inductive load

Pulse 2a - Simulates transients due to sudden interruption of currents in a device connected in parallel with the DUT due to the inductances of the wiring harness

Pulse 2b - Simulates transients from dc motors acting as generators after the ignition is switched off

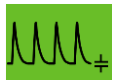

Pulse 3a/3b - Occurs as the result of switching processes. The characteristics of this pulse are influenced by distributed capacitance and inductance of the wiring harness

Pulse 4 - The voltage reduction caused by energizing the starter motor circuits of the internal combustion engines.

Pulse 4 Variants – Most manufacturer variations of pulse four are generally much more complicated. For example Ford requires up to four arbitrary generators with four outputs to be perfectly synchronized.

Pulse 5 – Simulation of a load dump transient occurring in the event of a discharged battery being disconnected while the alternator is generating charging current with other loads remaining on the alternator circuit at this moment

Magnetic Field Immunity – Simulates magnetic fields generated by electric motors, daytime running lamps, etc. for DUTs with magnetically sensitive devices.

Transformer Coupled Sine Waves – Sinusoidal noise coupled on battery lines

Dropout and interrupt testing (several types)

MIGRATION OF PULSE 4 AND 5 TO ISO 16750

In Summary:
Several pulses that were traditionally part of the EMC (ISO 7637) are have been moved to the ‘power quality’ standard (ISO 16750).

These include:

- ISO 7637-2:2004 Pulse 4 -> ISO 16750-2 “Starting Profile”
- ISO 7637-2:2004 Pulse 5a and 5b -> ISO 16750-2 “Load Dump A and B”

This is logical because these are not traditional EMC events, but instead an issue of power quality. Curiously, Pulse 2b will likely remain in ISO 7637.


INTERNATIONAL STANDARD ISO 7637-2:2011(E)

ISO/WD 7637-2

04.06.2019

ISO/TC22/SC32/WG3

ISO/TC 22/SC 32 N 2790

Date: 2019-01-16

ISO/WD 7637-2

ISO/TC 22/SC 32/WG 3

Secretariat: JISC

Road vehicles — Electrical disturbance by conduction and coupling — Part 2: Electrical transient conduction along supply lines only

Véhicules routiers — Perturbations électriques par conduction et par couplage — Partie 2: Transmission des perturbations électriques par conduction uniquement le long des lignes d'alimentation

ISO/WD 7637-2

04.06.2019

ISO/WD 7637-2

Contents

Page

ISO/WD 7637-2

6.3.9 Pulses A1, A2, C

6.3.9.1 General

These transient pulses are similar in origin to Pulses 1, 2a, 3a and 3b. However, they are differentiated by a number of factors including:

- These transient pulses are not simulations.
- Pulse characteristics (i.e. amplitude and wave shape) are affected by the resistive/capacitive loading of the DUT and other devices sharing the same circuit.
- Transient pulses occur as part of a "transient event" that is comprised of multiple transient pulses
- Both transient pulse and transient event characteristics are not repetitive by nature and can vary significantly between consecutive events. This pseudo-random behavior is known to cause malfunction of DUT software execution

Currently, test pulses A1, A2 and C are limited to devices connected to nominal 12V systems.

6.3.9.2 Pulse Test Modes and Duration

Transient pulses A1, A2 and C are applied to the DUT using up to three different test modes ranging from simple repetitive events to pseudo-random events. The purpose for this type of application is to enhance detection of software malfunction.

Mode 1:

Mode 1 represents a condition where the test pulse is applied in repetitive timing sequence with a fixed pulse repetition rate of 0.2 Hz with 10% duty cycle. The timing sequence and associated transient waveform is illustrated in Figure 12.

Mode 2:

Mode 2 represents a condition where single transient events are applied using a pseudo-random timing sequence as illustrated in Figure 13. The value "T" shall be ≥ 50 ms due to limitations in the test generator.

ISO/WD 7637-2

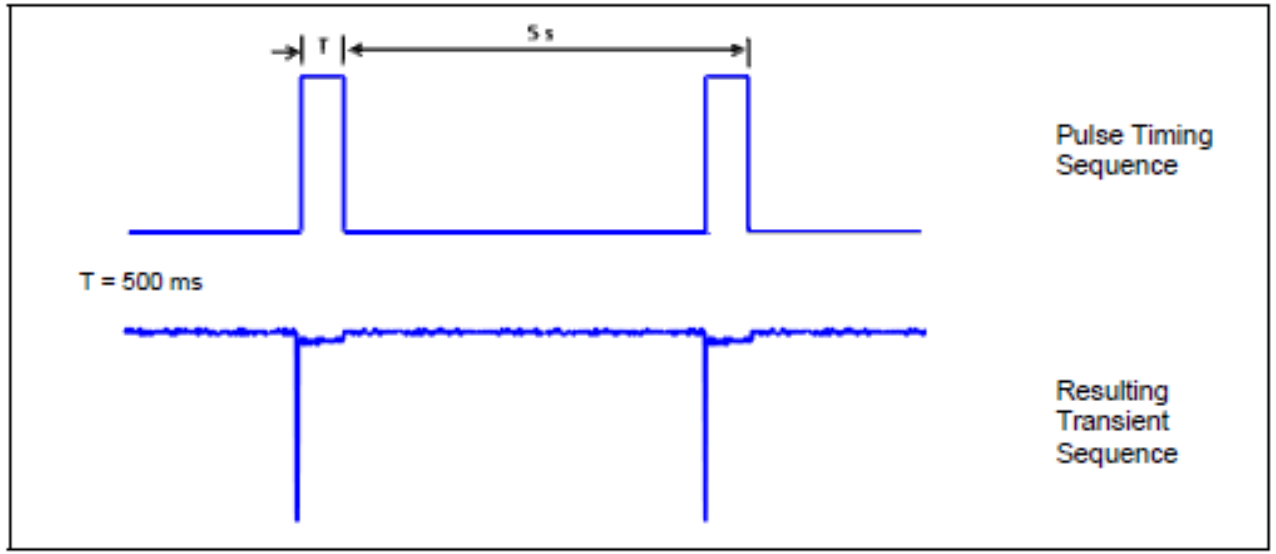

Figure 12 — Mode 1 Transient Sequence

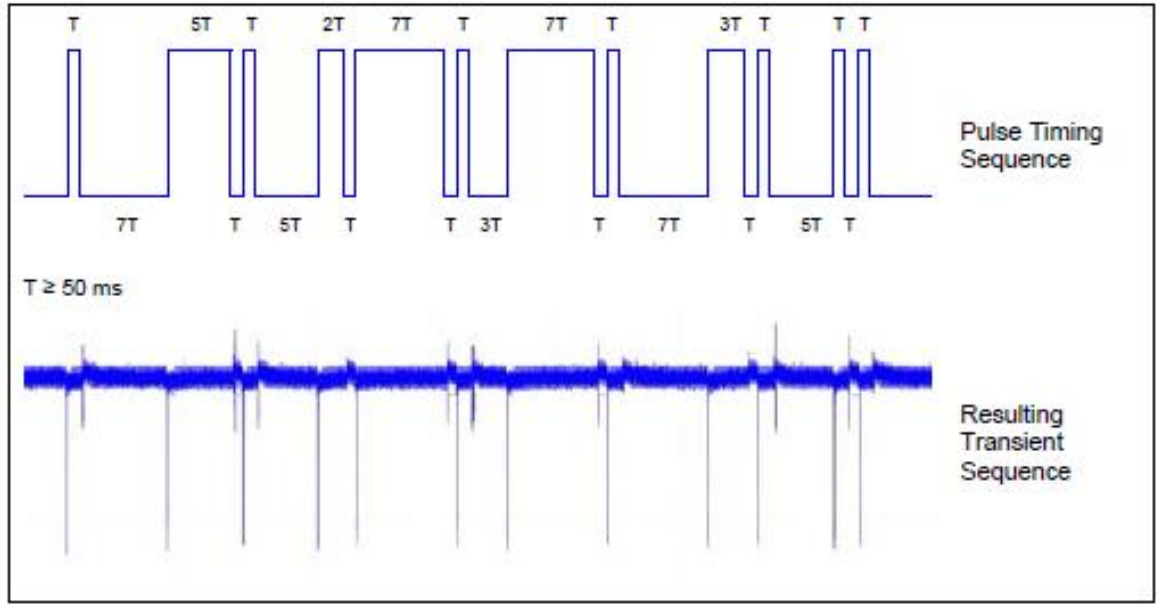

Figure 13 — Mode 2 Transient Sequence

ISO/WD 7637-2

Mode 3:

Mode 3 represents a condition where multiple transient events (i.e. burst) are applied using a pseudo-random sequence as illustrated Figure 14. The timing sequence is identical to that used for Mode 2. Mode 3 is used only with test pulses C-1, and C-2. **The value "T" shall be ≥ 50 ms due to limitations in the test generator.**

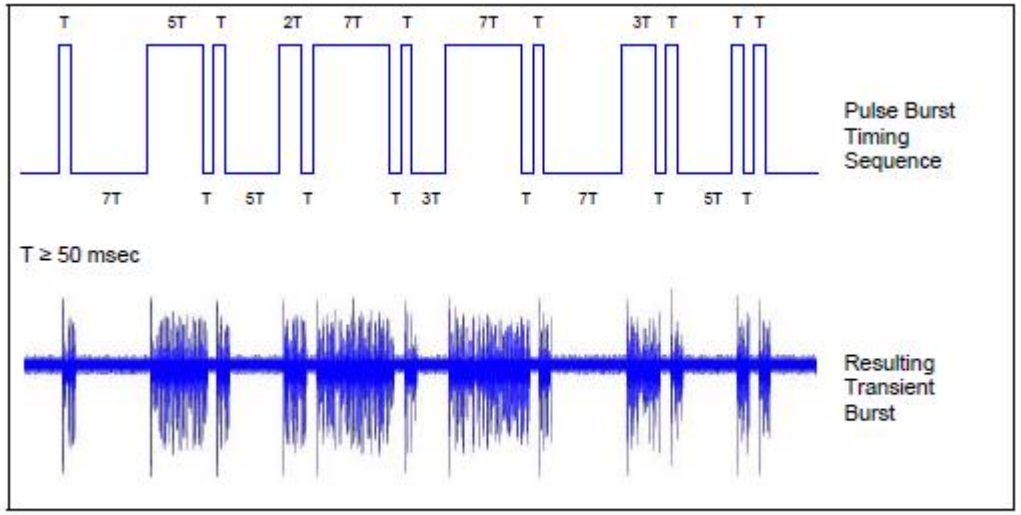

Figure 14 — Mode 3 Transient Sequence

Unless otherwise agreed to by the vehicle manufacturer and supplier, test duration times for test pulses, A1, A2 and C are listed in Table 7.

Table 7 — Test Duration

Test Pulse	Test Duration Time (sec)		
	Mode 1	Mode 2	Mode 3
A1	120	120	n/a
A2-1	120	120	n/a
A2-2	120	120	n/a
C-1	n/a	60	60
C-2	n/a	60	60

ISO/WD 7637-2, PULSE GENERATOR

5.6.3 Test pulse generator for immunity testing Pulses A1, A2, and C

Figure 3 illustrates the transient generator circuit that will produce transient pulses A1, A2, and C in Modes 1, 2 and 3. It is important to emphasis that the electromechanical relay used is of an AC type. Although energized via DC voltage, the choice of design helps better facilitate Mode 3 operation. Selection of test pulses and operating modes is facilitated by simple switch settings. Although these relays may be used for long duration, it is recommended that the relay be replaced after 100 hours of usage to assure the waveform characteristics remain reasonably stable.

The circuit in Figure 3 is contained in a metal enclosure that is terminated to the ground plan when in use (see Figure 4)

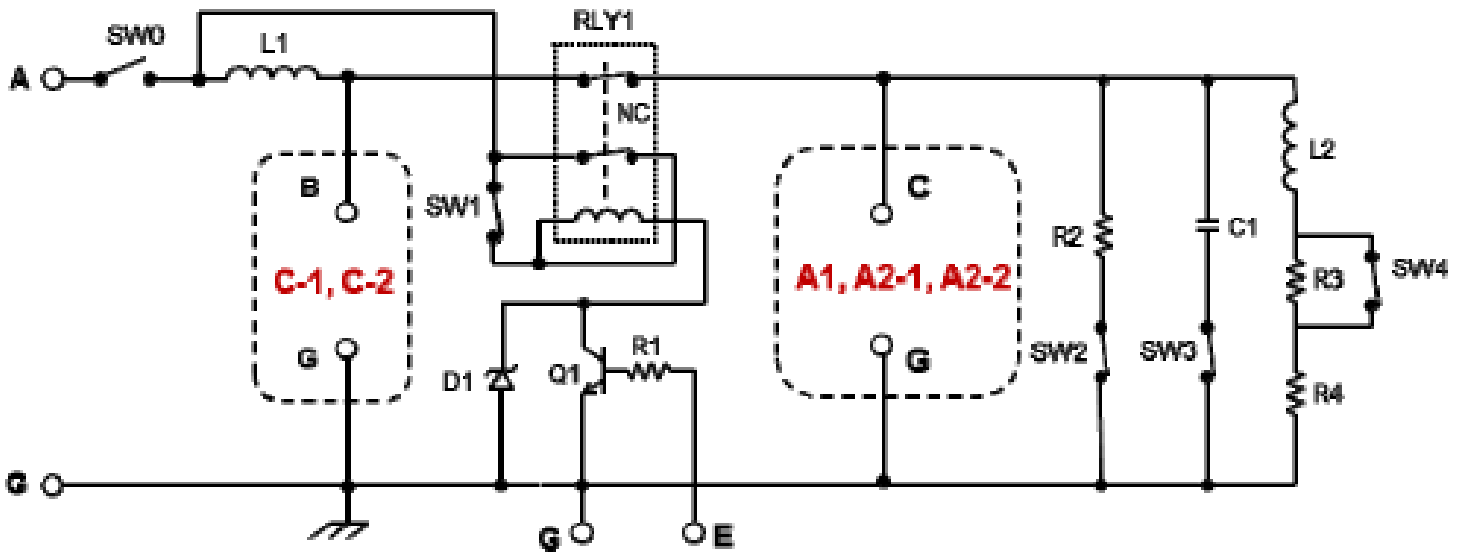

ISO/WD 7637-2, PULSE A1

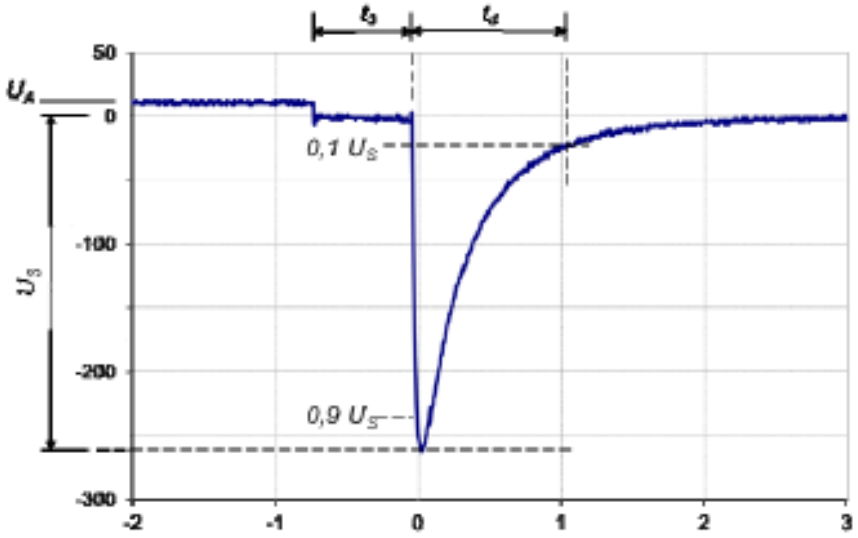

Figure 18 — Test pulse A1

Table 8 — Parameters for test pulse A1 (typical)

Parameters	Nominal 12 V system
U_S	-300 to -250
t_d	1 – 2 ms
t_3	200 – 700 us

ISO/WD 7637-2, PULSE A2-1

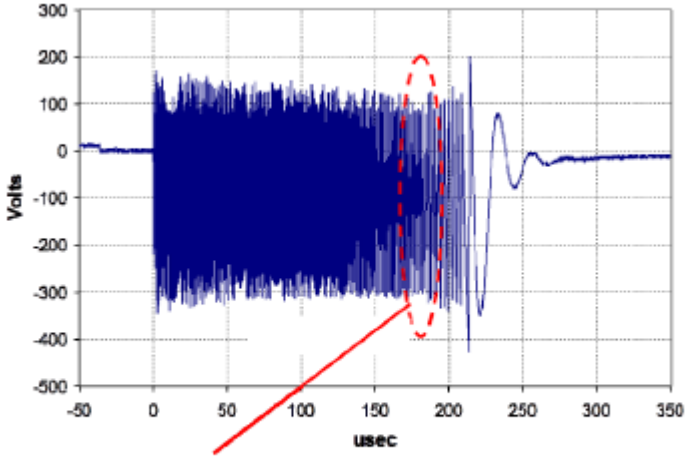

See Figure 14 for detail

Figure 20 — A2-1 Transient Event

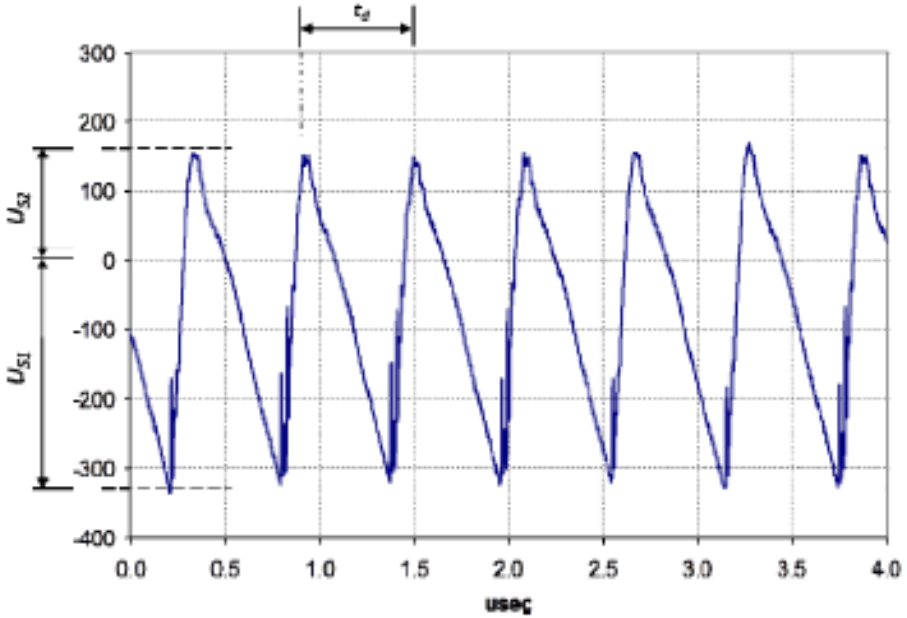

Figure 21 — Pulse A2-1 Detail

Table 10 — Parameters for test pulse A2-1 (typical)

Parameters	Nominal 12 V system
U_{S1}	-280 to -500V
U_{S2}	+100 to +300V
t_d	100ns to 1µs

ISO/WD 7637-2, PULSE A2-2

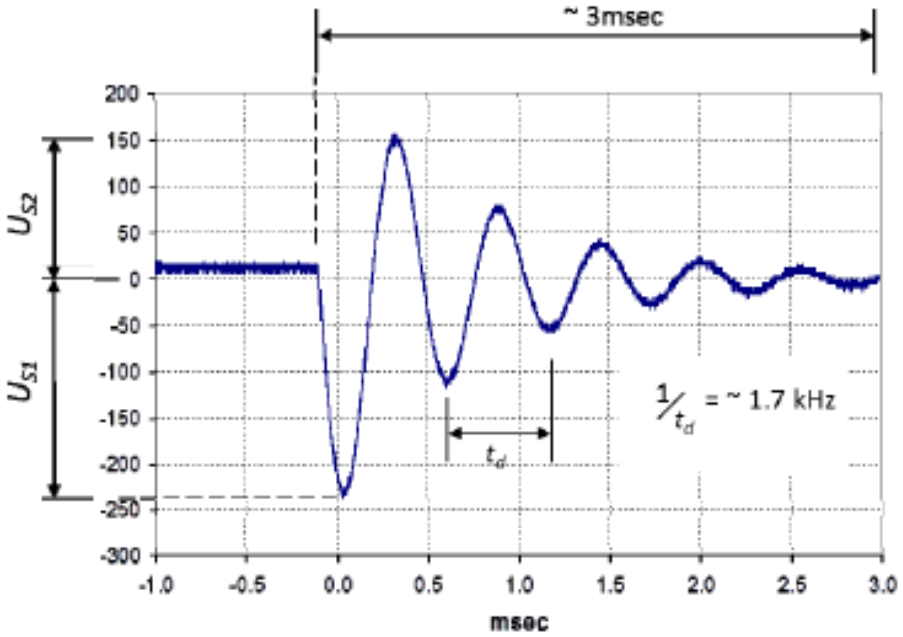

Figure 22 — Pulse A2-2 Contact Opening

Table 1— Parameters for test pulse A2-2: contact opening (typical)

Parameters	Nominal 12 V system
U_{S1}	- 250 V
U_{S2}	+150 V
t_d	~ 600 ms

ISO/WD 7637-2, PULSE A2-2

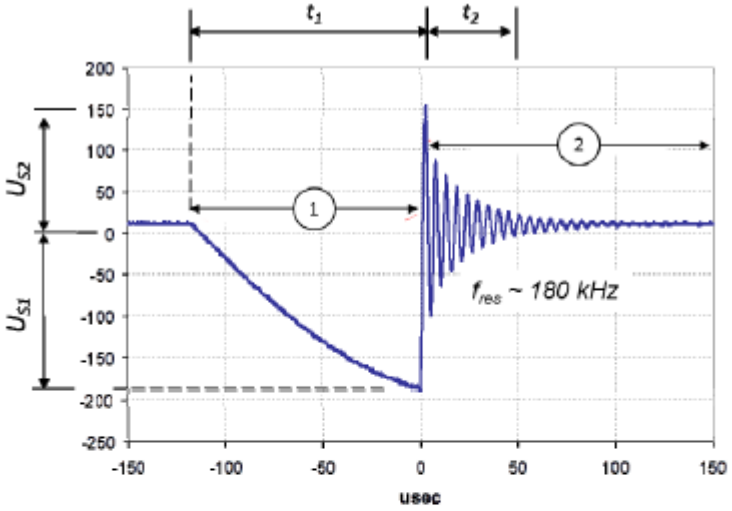

make

break

Figure 23 — Pulse A2-2 Contact Bounce

Table 12 — Parameters for test pulse A2-2: contact opening (typical)

Parameters	Nominal 12 V system
U_{S1}	- 200 V
U_{S2}	+150 V
t_1	~ 100 us
t_2	~ 50 us
f_{res}	~ 180 kHz

ISO/WD 7637-2, PULSE C-1 VS A2-1

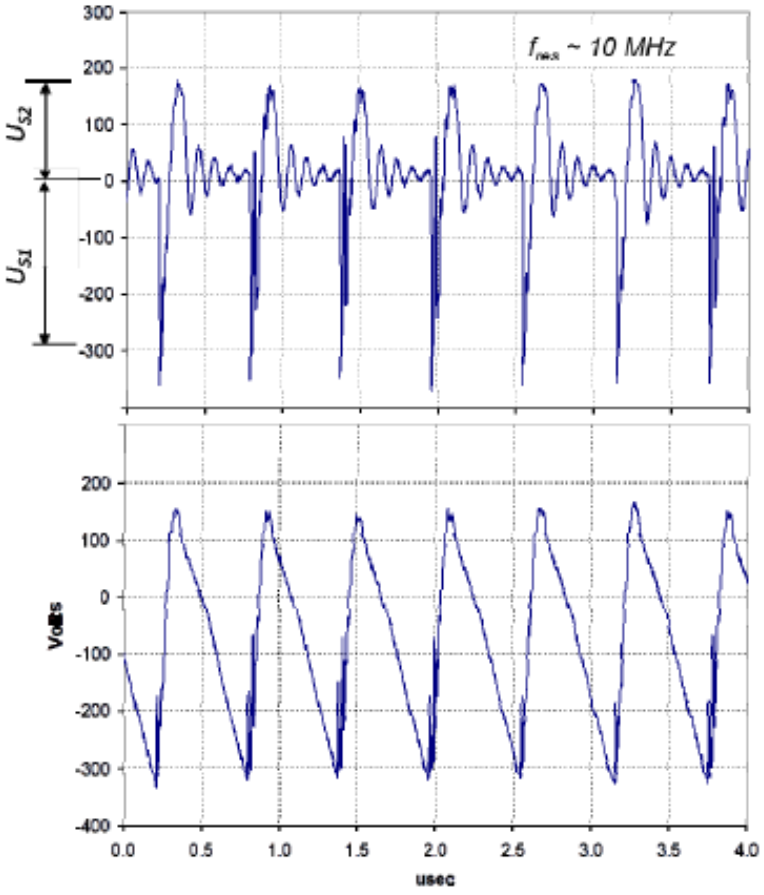

Pulse C-1

Pulse A2-1

Figure 26 — Pulse C1-1 Characteristics

Table 14 — Parameters for test pulse A2-2: contact opening (typical)

Parameters	Nominal 12 V system
U_{S1}	-280 to - 400 V
U_{S2}	+150 to +250 V
f_{res}	~ 10 MHz

ISO/WD 7637-2, PULSE C-2 VS A2-2

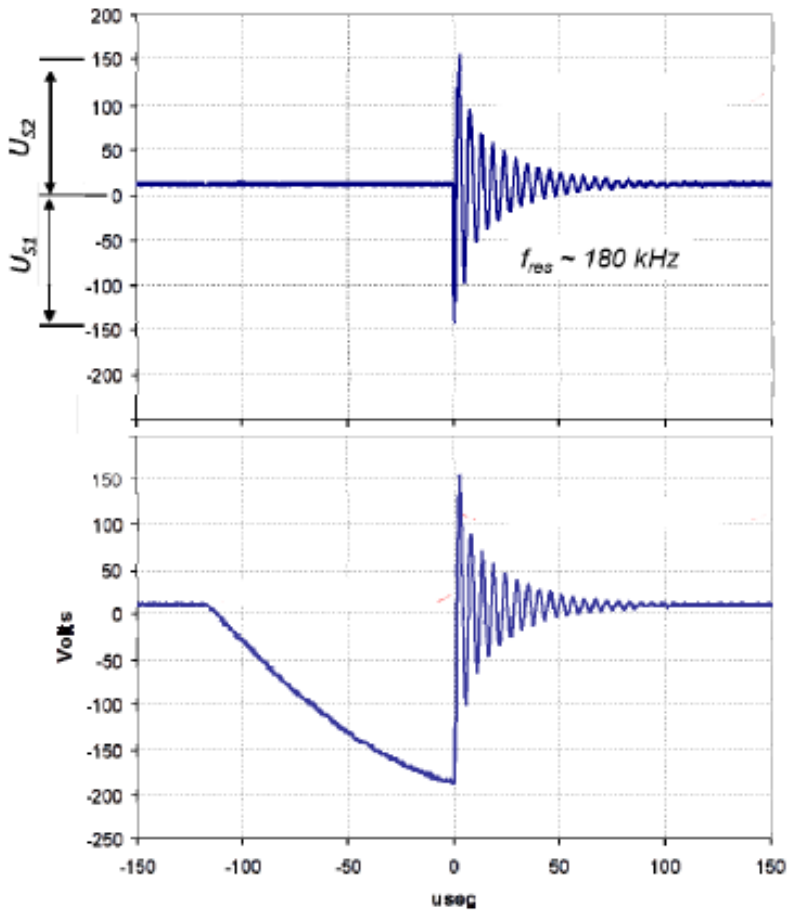

Pulse C-2

Pulse A2-2

Figure 27 — Pulse C-2 characteristics

Table 15 — Parameters for test pulse A2-2: contact opening (typical)

Parameters	Nominal 12 V system
U_{S1}	-150
U_{S2}	+150
f_{res}	~ 180 kHz

ISO/WD 7637-2

A new ISO 7637-2 is still too early to discuss in details, but the following two big steps will take place:

- The “Ford” method, currently found in the Annex will (most likely) be included in the main body of the text as an ‘optional’ test, and will contain text explaining that the pulses are just typical, and there is no calibration possible/required. This would be a good time to discuss the Relais chattering box (Ford)…
- An extended verification ***with battery*** and two different loads: a resistive and R/C load is under discussion. Currently there is no agreed parameters nor method that actually works with any generator, so its really early in the process. This will take minimum a few years.

emtest / TESEQ / MILMEGA / JFI

AMETEK®
COMPLIANCE TEST SOLUTIONS

ISO 7637-3 (UPDATED 2016)

ROAD VEHICLES – ELECTRICAL DISTURBANCES FROM CONDUCTION AND COUPLING – PART 3: ELECTRICAL TRANSIENT TRANSMISSION BY CAPACITIVE AND INDUCTIVE COUPLING VIA LINES OTHER THAN SUPPLY LINES

FRANK NIECHCIAL

04.06.2019

THE WORLD'S SPEED IS OUR BEAT

COUPLING ON SIGNAL LINES

Generally, there are three ways to couple pulses onto signal lines:

- Wire Bundle: Capacitively with a Clamp or Jig -> CCC
- Wire Bundle: Inductively with a BCI Clamp -> ICC
- Individual Wires: Capacitively using Capacitors -> DCC

Was last updated 2016!

INTERNATIONAL STANDARD

ISO 7637-3

Second edition
2007-07-01

Road vehicles — Electrical disturbances from conduction and coupling —

Part 3:
Electrical transient transmission by capacitive and inductive coupling via lines other than supply lines

Table 1 — Test method applicability

Transient type	CCC method	DCC method	ICC method
Slow pulses of 4.3.3	Not applicable	Applicable	Applicable
Fast pulses a and b of 4.3.2	Applicable	Applicable	Not applicable

ICC METHOD

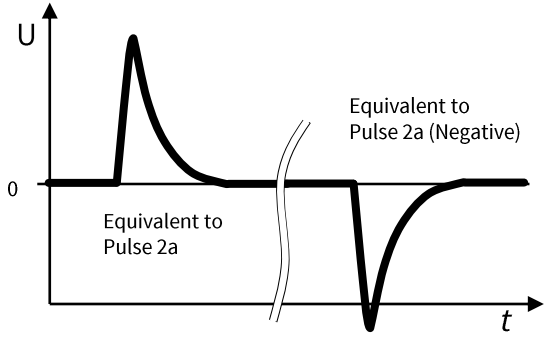

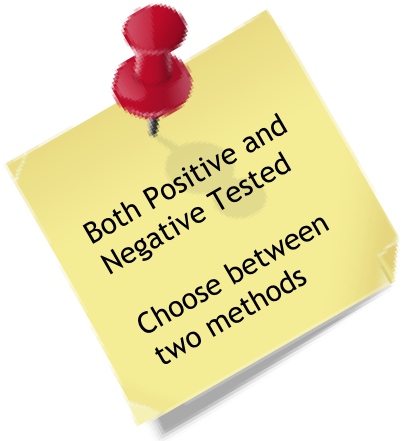

ICC Method

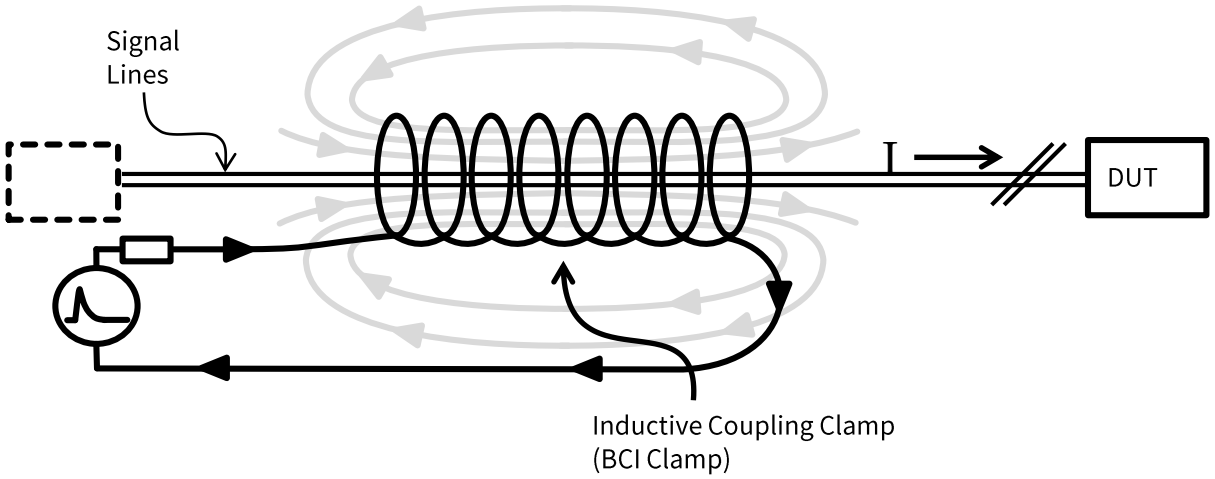

DCC Method

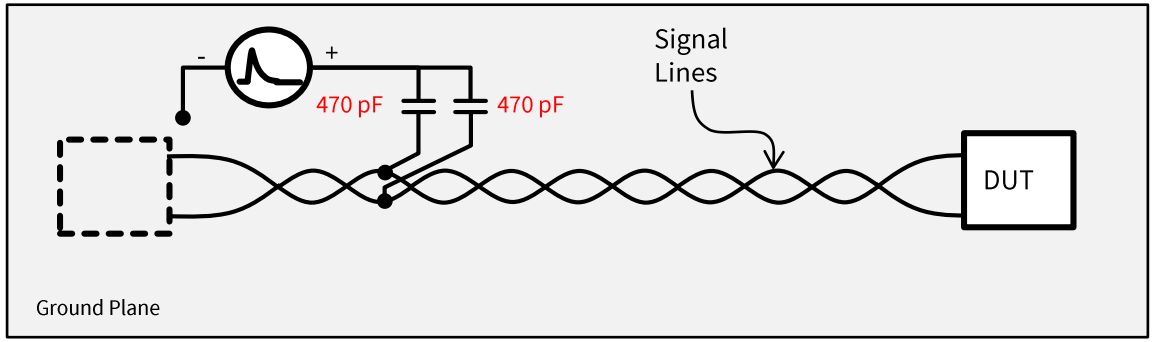

ICC METHOD

- DUT, ICC (BCI Clamp) and Control/Peripheral have to be placed on a insulating block (height 50mm) above the GND-plane.
- An adapter is connected to the output the UCS 200N and the output of adapter is connected to BCI clamp using a coax cable of 50cm max.
- The Adapter must be matched to the clamp
- The battery cables are connected to the DUT directly.
- If the auxiliary equipment (control/peripheral) is grounded locally this local GND-connection shall be excluded from the ICC.

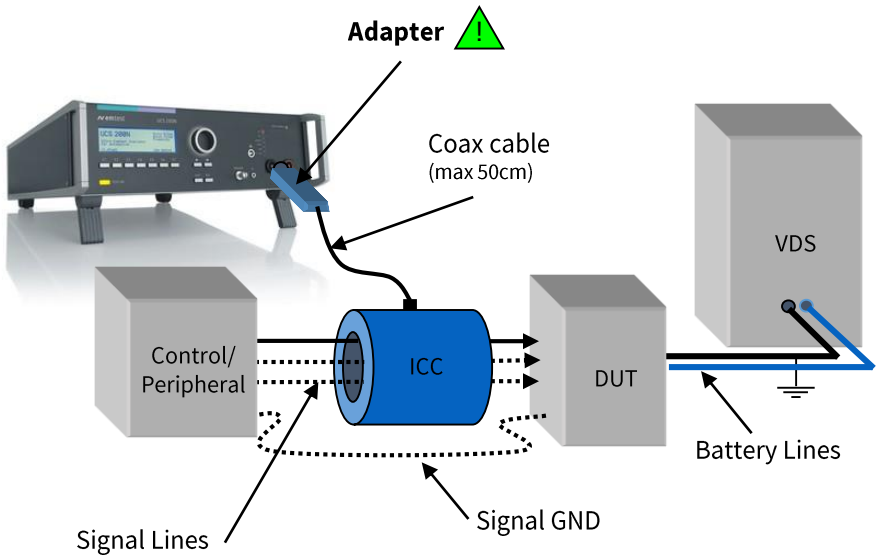

CCC + DCC METHOD

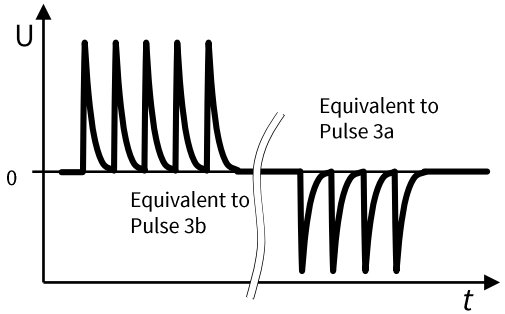

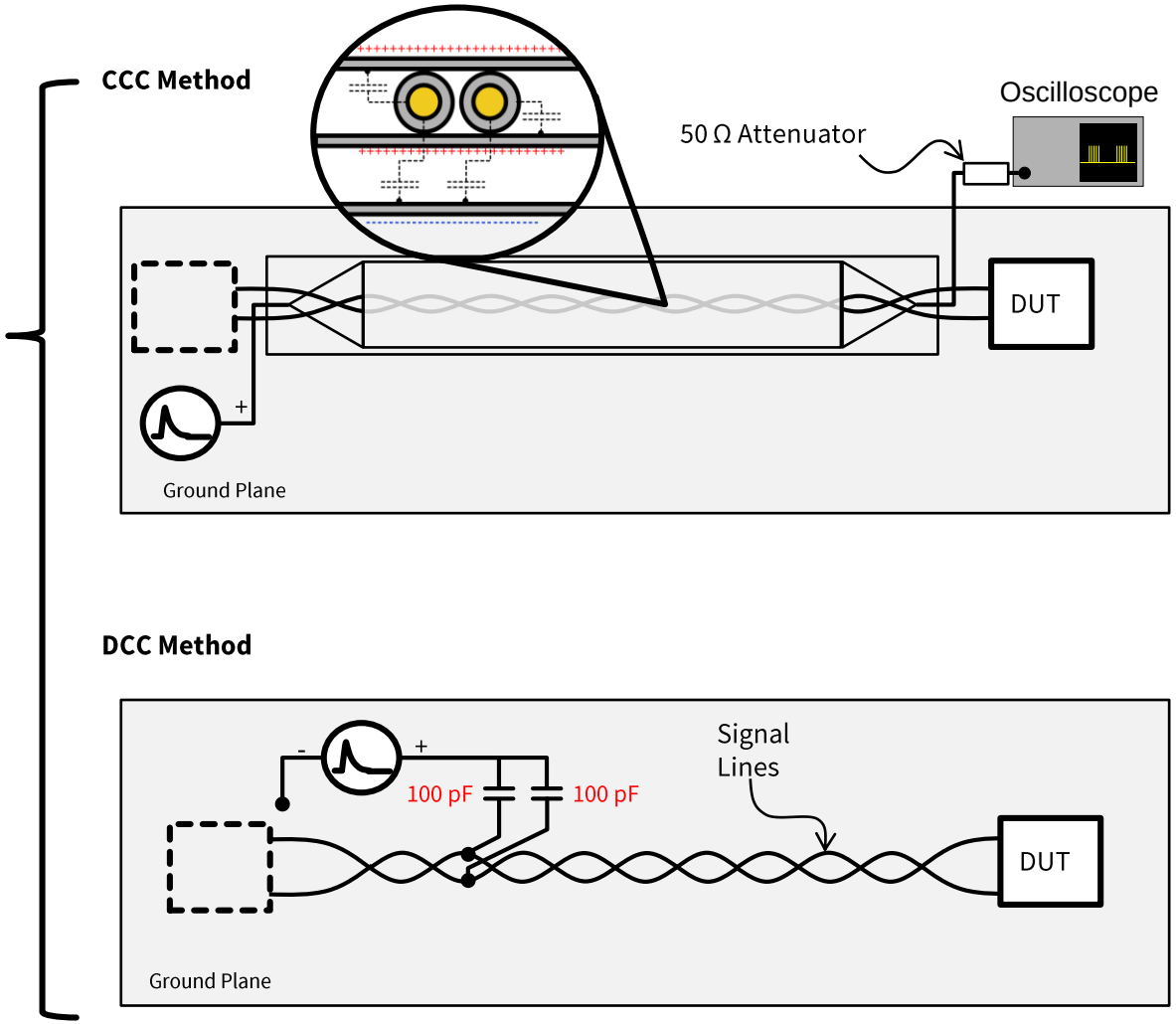

emtest / TESEQ / MILMEGA / JFI

AMETEK®
COMPLIANCE TEST SOLUTIONS

ISO/DTS 7637-4 (DRAFT UPDATED)

ROAD VEHICLES – ELECTRICAL DISTURBANCES BY CONDUCTION AND COUPLING – PART 4: ELECTRICAL TRANSIENT CONDUCTION ALONG SHIELDED HIGH VOLTAGE; SUPPLY LINES ONLY

FRANK NIECHCIAL

04.06.2019

THE WORLD'S SPEED IS OUR BEAT

ISO/DTS 7637-4

ISO/TC22/SC32/WG3 N 2791

Date: 16/01/2019

DTS 7637-4

ISO/TC 22/SC32/WG 3

Secretariat: JISC

Road Vehicles – Electrical disturbances by conduction and coupling – Part 4: Electrical transient conduction along shielded high voltage supply lines only

Véhicules routiers — Perturbations électriques par conduction et par couplage — Partie 4: Transmission des perturbations électriques par conduction uniquement le long des lignes d'alimentation

ISO/DTS 7637-4

ISO 7637 consists of the following parts, under the general title *Road vehicles — Electrical disturbances by conduction and coupling*:

— *Part 1: Definitions and general considerations*

— *Part 2: Electrical transient conduction along supply lines only*

— *Part 3: Electrical transient transmission by capacitive and inductive coupling via lines other than the supply lines.*

— *Part 4: Electrical transient conduction along shielded high voltage supply lines only*

— *Part 5: Enhanced definitions and verification methods for harmonization of pulse generators according to ISO 7637*

ISO/DTS 7637-4

1 Scope

This part of ISO 7637 specifies test methods and procedures to ensure the compatibility to conducted electrical transients along shielded high voltage supply lines of equipment installed on passenger cars and commercial vehicles fitted with electrical systems with voltages higher than 60 $V_{d.c.}$ and lower than 1 500 $V_{d.c.}$ and a power-supply isolated from the vehicle-body. It describes bench tests for both, injection and measurement of transients. It is applicable to all types of electrical independent driven, road vehicles (e.g. battery electrical vehicle (BEV) or hybrid electrical vehicle (HEV), plugin hybrid electric vehicle (PHEV)).

4.1 General

Various types of transients appear on the high voltage supply lines generated by the switching of various devices. Pulse B represents ringing caused by switching operations of high voltage semiconductors. Pulse C represents sinusoidal waves generated by harmonics from the grid and revolutions from e.g. electric propulsion motors.

ISO/DTS 7637-4

This working draft specifies now only 2 different tests on HV-supply lines

~~4.4.2~~	~~Voltage Ripple (Pulse A)~~	~~Line-to-Line Line-to-Ground~~		~~Square 1 kHz to 300kHz~~		
4.4.2	Pulsed Sinusoidal Disturbances (Pulse B)	Line-to-Line Line-to-Ground		Sinus 1-10 MHz		
4.4.3	Low frequency sinusoidal disturbances (Pulse C)	Line-to-Line Line-to-Ground		Sinus 15 Hz - 300kHz		

Test pulse B is used for testing high frequency oscillations, e.g. fast switching.
Test pulse C is used to test equipment against transient voltages. The nearly rectangular shaped pulses include different harmonics and fast rise times.

E-VEHICLE COMPONENTS

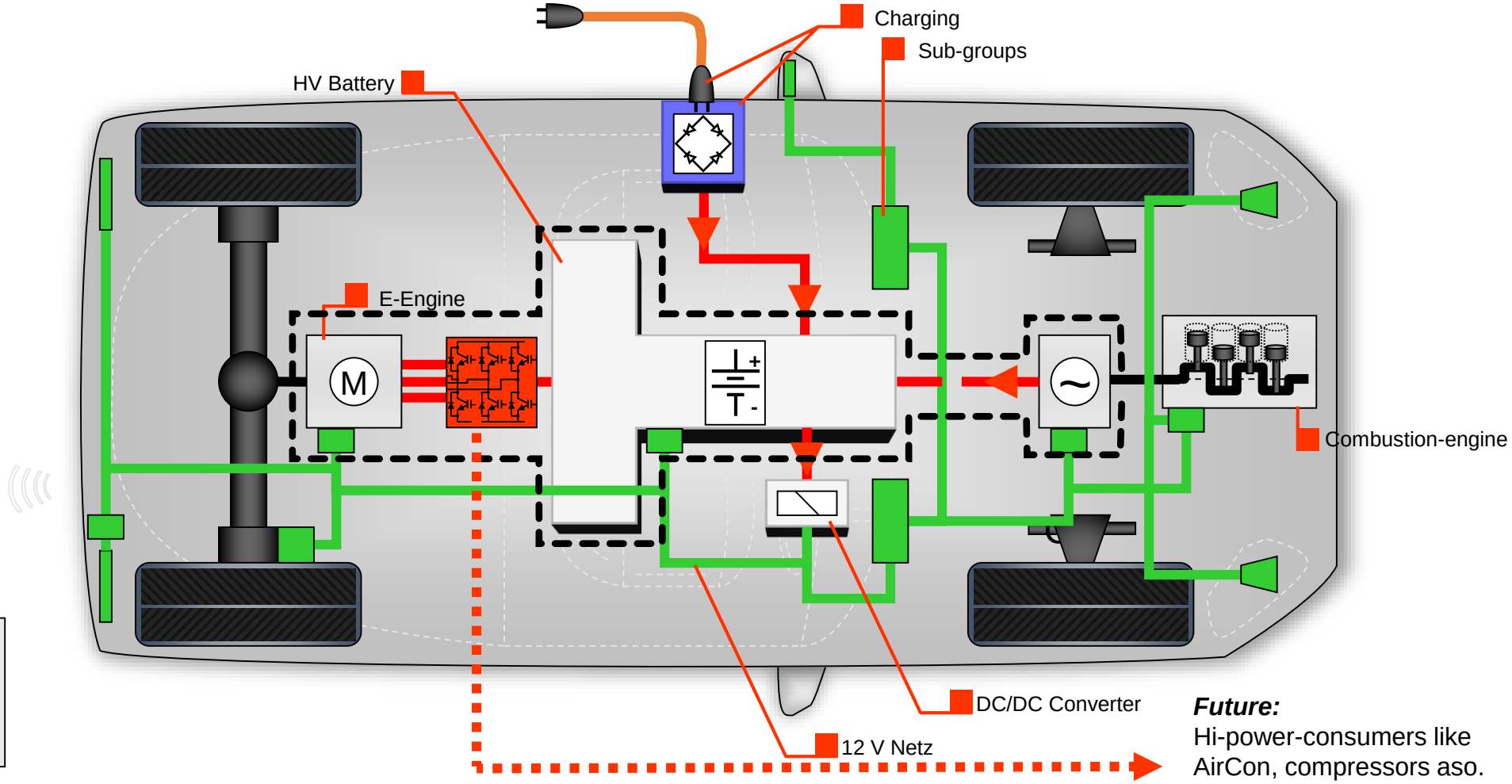

Mechanical	
Charging	
12 V System	
HV-System	

Future:
Hi-power-consumers like AirCon, compressors aso.

GENERAL

Methods for measuring the transient emission on shielded high voltage supply lines and test methods for the immunity of devices against transients are given. These tests, called "bench tests", are made in the laboratory.

The bench test methods will provide comparable and reproducible results between laboratories. They also give a test basis for the development of devices and systems and may be used during the production phase.

A bench test method for the evaluation of the immunity of a device against supply line transients may be performed by a test pulse generator; this may not cover all types of transients which can occur in a vehicle. Therefore, all described test pulses are typical pulses.

In special cases, it may be necessary to apply additional test pulses. However, some test pulses may be omitted, if a device, depending on its function or its connection is not influenced by comparable transients in the vehicle. It is part of the vehicle manufacturer's responsibility to define the test pulses required for a specific device.

IT‘S NOT MANDATORY TO TEST BOTH PULSES!

2 TYPES OF TEST PULSES

Experts expected 3 different types of test pulses in E- and Hybrid-cars, but pulse A is removed now:

Voltage Ripple (Pulse A, removed!)
1 kHz - 300kHz

Pulsed Sinusoidal Disturbances (Pulse B)
1-10 MHz

Low frequency sinusoidal disturbances (Pulse C)
Hz 15 Hz - 300kHz

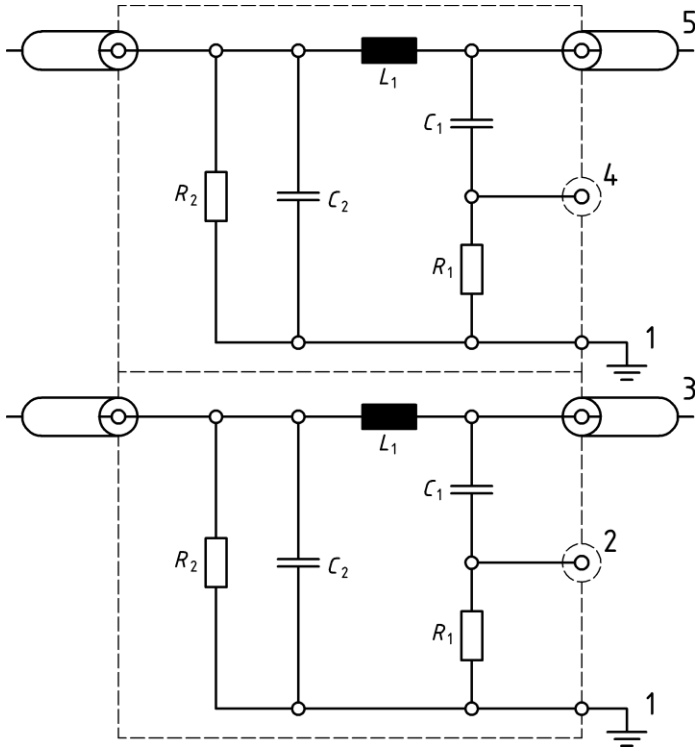

- Need of shielded artificial network
- Substitution-methode speficied for Level-setting off all puses
- Emission has to be tested
- Immunity against EFT/Burst and Surge are deleted

EMISSION ON HV-SUPPLY-LINES

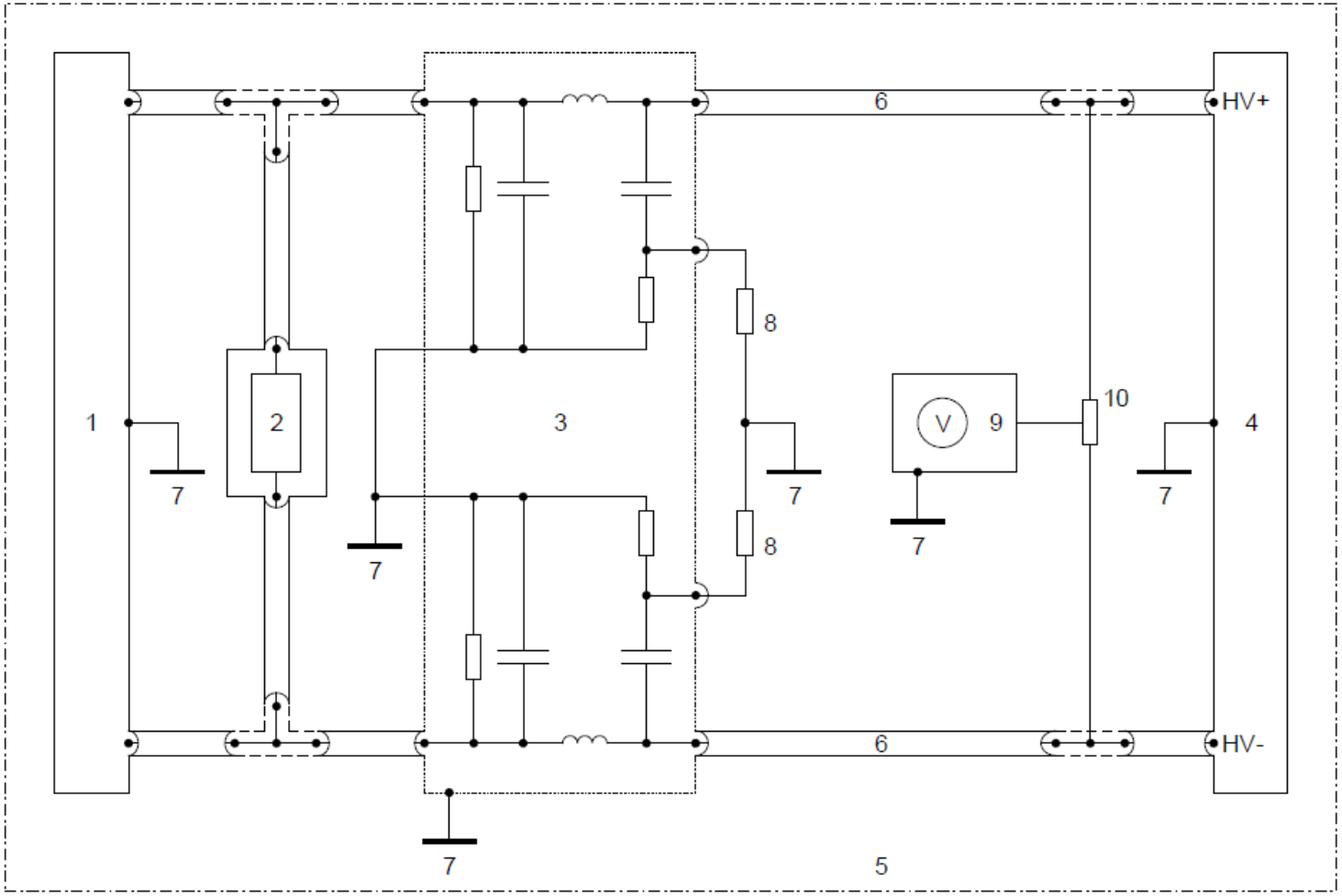

Legende:

1 shielded high voltage power supply
2 load for high voltage battery
3 shielded high voltage artificial network
4 DUT
5 ground plane
6 high voltage supply line (*)
7 ground connection
8 50 Ω termination
9 oscilloscope or waveform acquisition equipment
10 high voltage differential probe

3. HV-AN 150, TESEQ

EMISSION ON HV-SUPPLY-LINES

Limits are just roughly defined. Definite limits has to be determined with the OEM.

Table B.1 - Terms and abbreviations

Parameter	Definition see ISO 7637-1	Abbreviation
Peak amplitude	3.12	U_s (U_{S1}, U_{S2})
Pulse duration	3.13.1	t_d
Pulse rise time	3.13.2	t_r
Pulse fall time	3.13.3	t_f
Pulse repetition time	3.14.4	t_1
Burst duration	3.14.1	t_4
Time between bursts	3.14.2	t_5
Burst cycle time	3.14.3	$t_4 + t_5$

TEST PULSE A (VOLTAGE RIPPLE)

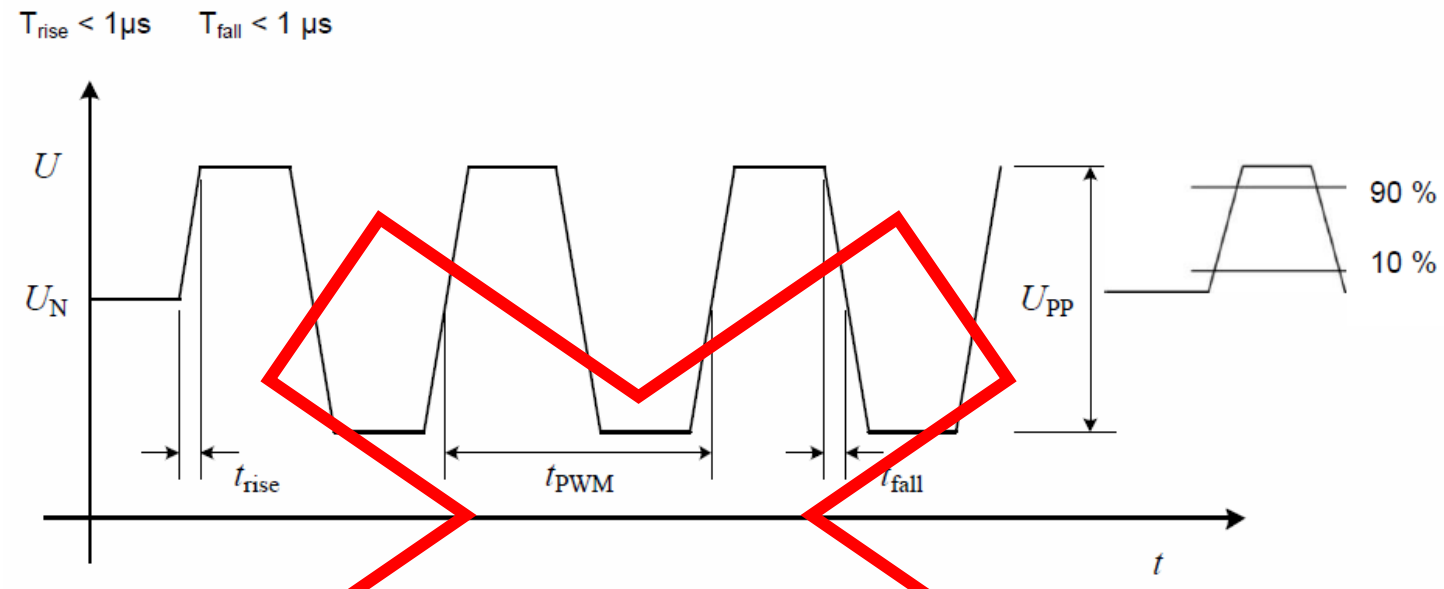

Frequency: 1 kHz to 300 kHz (50% duty cycle)
Z_{out} ≤0.5 Ω
T_{rise}, T_{fall} < 1µs (ohne last, bei 25 Vpp)

Coupling capacitor 120 uF
Calibration in short-circuit
Test level up to 50 Vpp

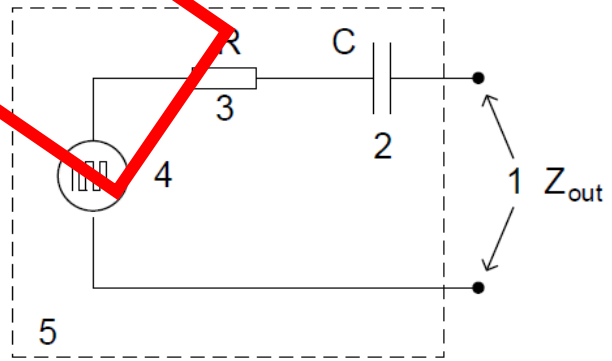

TEST PULSE B (PULSED SINUSOIDAL DISTURBANCES)

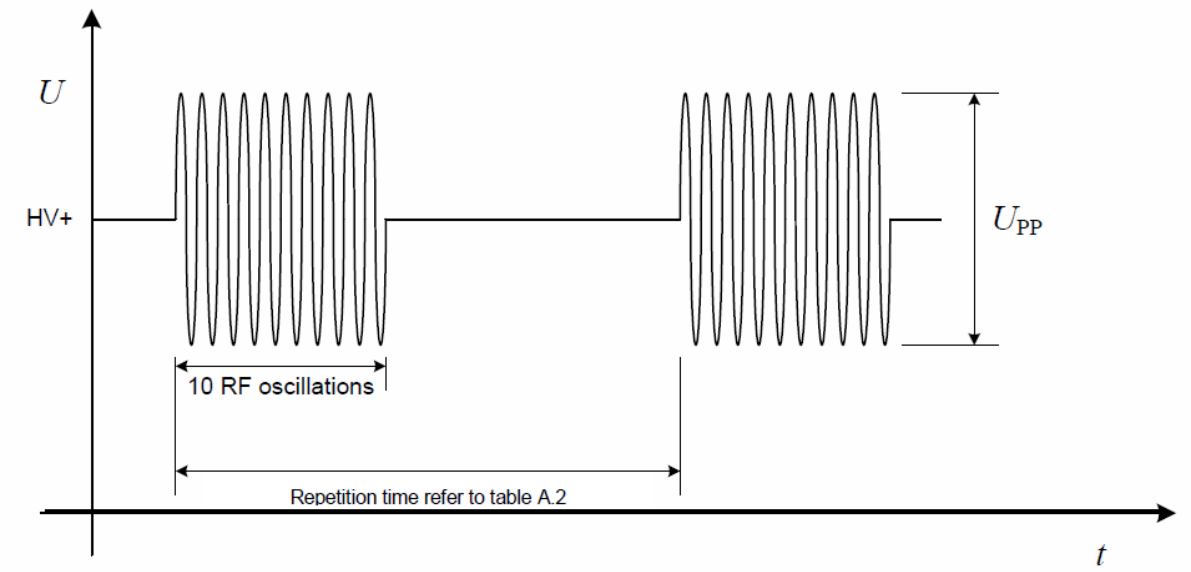

Frequency: 1 bis 10 MHz
Z_{out} 50 Ω
Package-width: 200/100/50 µs

Test level up to **50/300 Vpp** (50 Ω)

A.2.2 Test pulse B, Pulsed Sinusoidal Disturbances

Pulse frequency (MHz)	Test voltage U_{pp} [V] *) severity level					Oscillations per pulse packet	Repetition time (µs)	Test duration (minutes)	Test coupling
	I	II	III	IV	V				
1	10	20	50	100**)	300**)	10	200 / 100 / 50	5 / 5 / 5	HV+ to HV- HV+ to ground HV- to ground
2									
5									
10									

Table A.2.2 – Parameters for testpulse B, pulsed sinusoidal disturbances

*) Test voltage shall be aligned at 50 ohm load. The load remains in the test setup Details shall be agreed between vehicle manufacturer and supplier.

**) Should be used for commercial vehicles

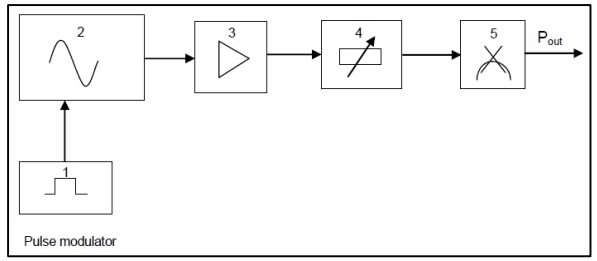

Block diagram testgenerator for pulse B

TEST PULSE C (LOW FREQUENCY SINUSOIDAL DISTURBANCES)

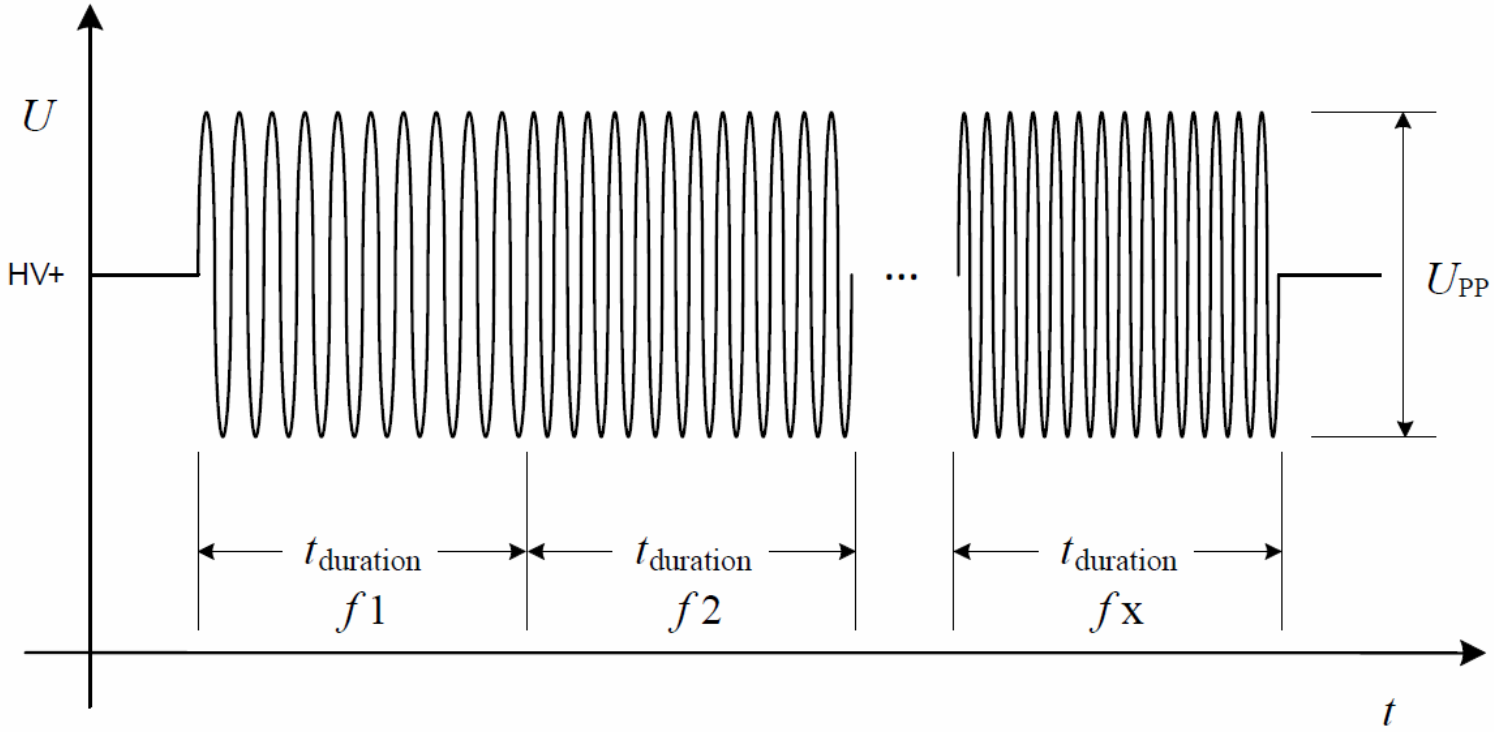

Frequency: 3 kHz to 300 kHz (<3 kHz optional)
Z_{out} 50 Ω
Dwell: 2s per frequence

Test level up to 25 Vpp

TEST PULSE B (PULSED SINUSOIDAL DISTURBANCES)

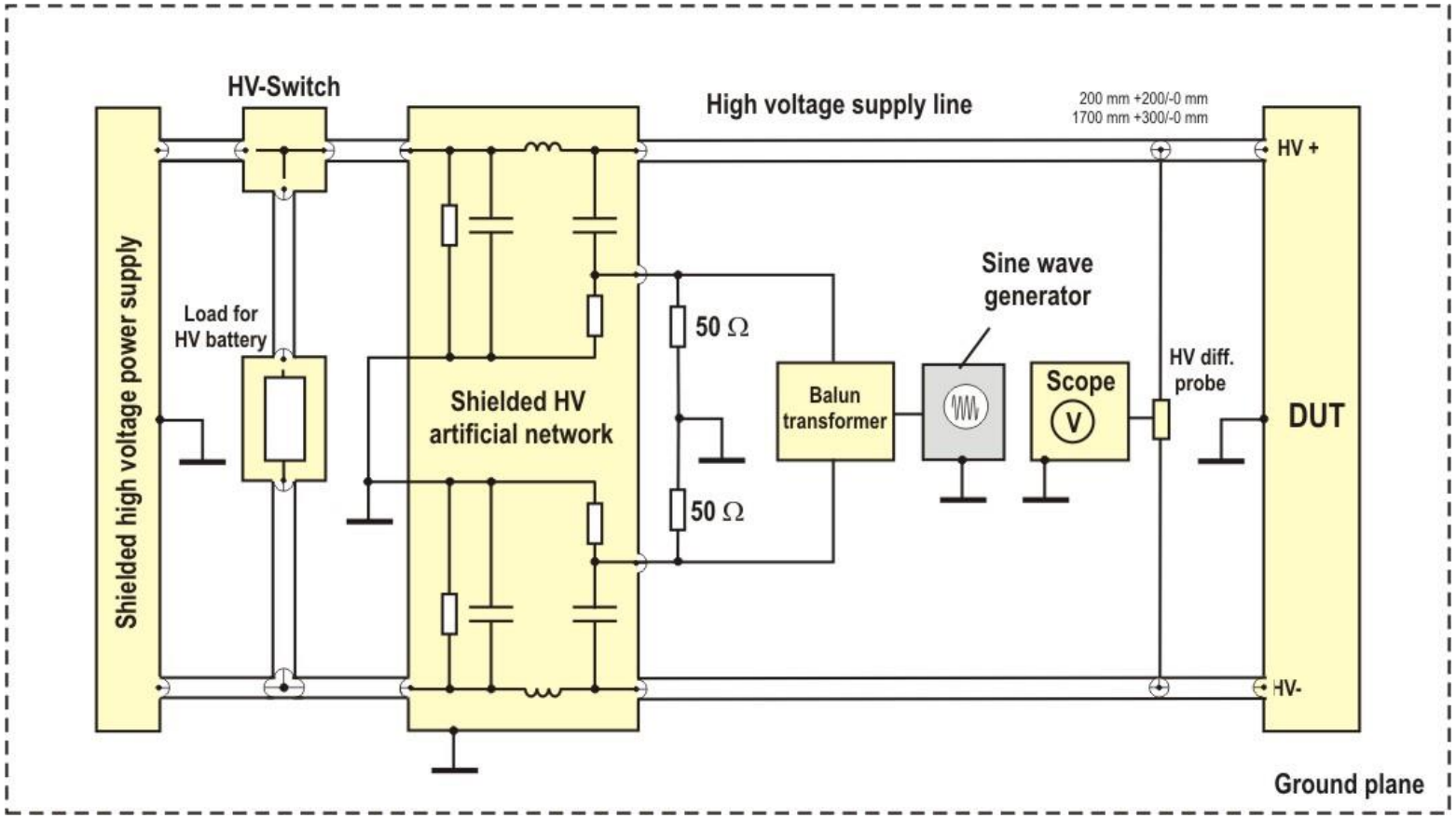

*The Balun is optional and still being discussed.
We're performing simulations using an NSG 4070C

TEST PULSE B (PULSED SINUSOIDAL DISTURBANCES), LINE-TO-LINE SETUP

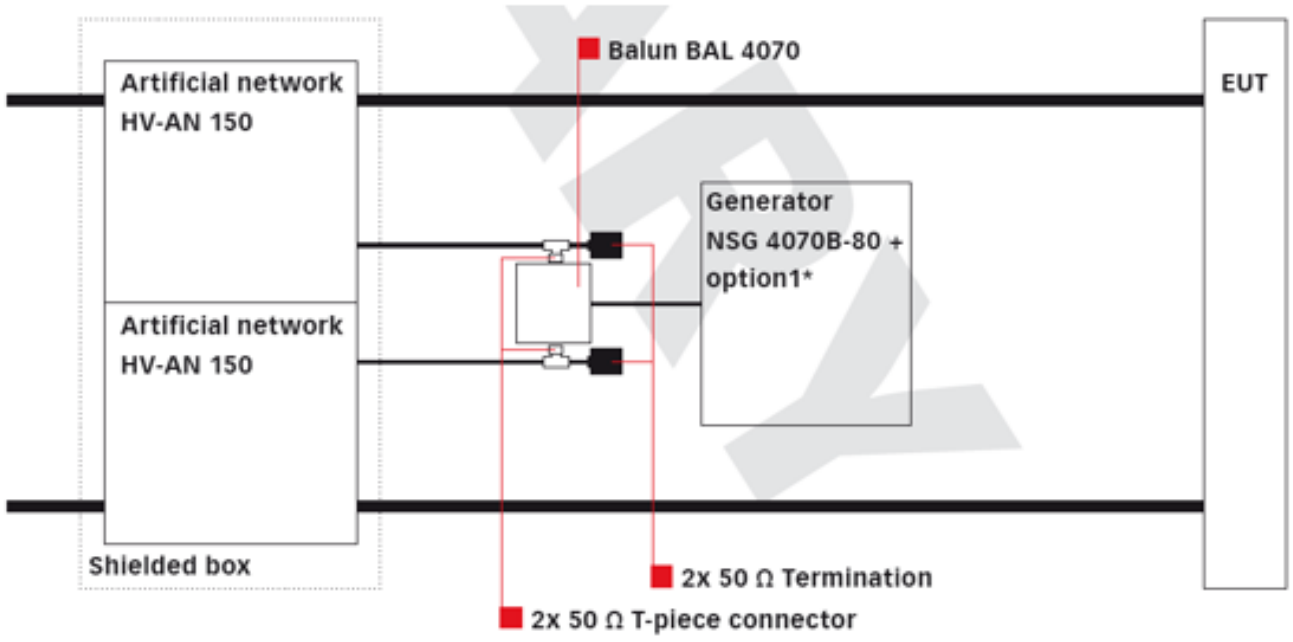

- BALUN FOR PULSED SINUSOIDAL DISTURBANCES TEST ACCORDING ISO 7637-4 (DRAFT VERSION 2015)
- FREQUENCY RANGE 1 MHZ TO 10 MHZ
- N SOCKETS INPUT 50 Ω TO OUTPUT 2X N (SYMMETRICAL 100 Ω, SCREENED)

TEST PULSE B (PULSED SINUSOIDAL DISTURBANCES), LINE-TO-LINE SETUP

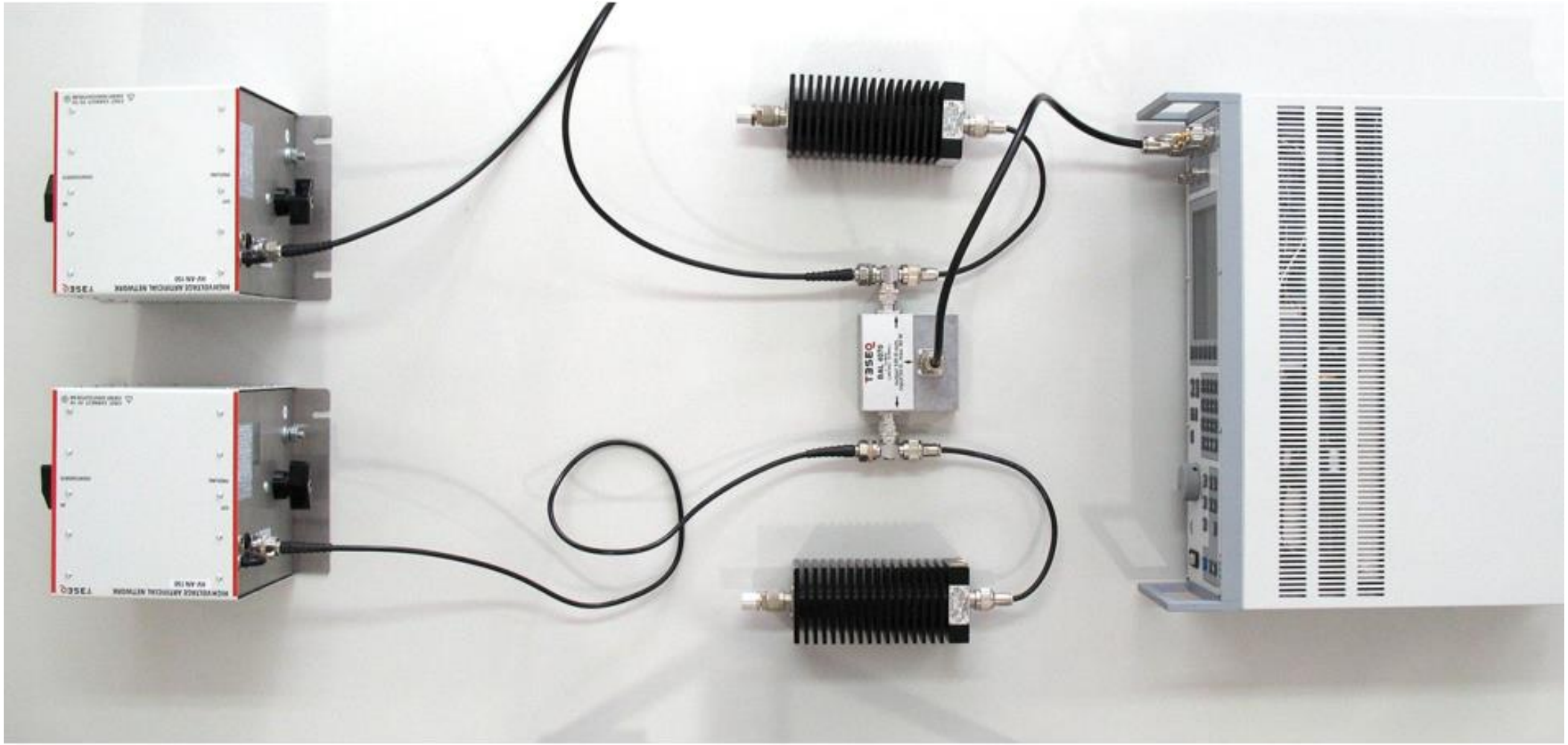

TEST PULSE C (LOW FREQUENCY SINUSOIDAL DISTURBANCES)

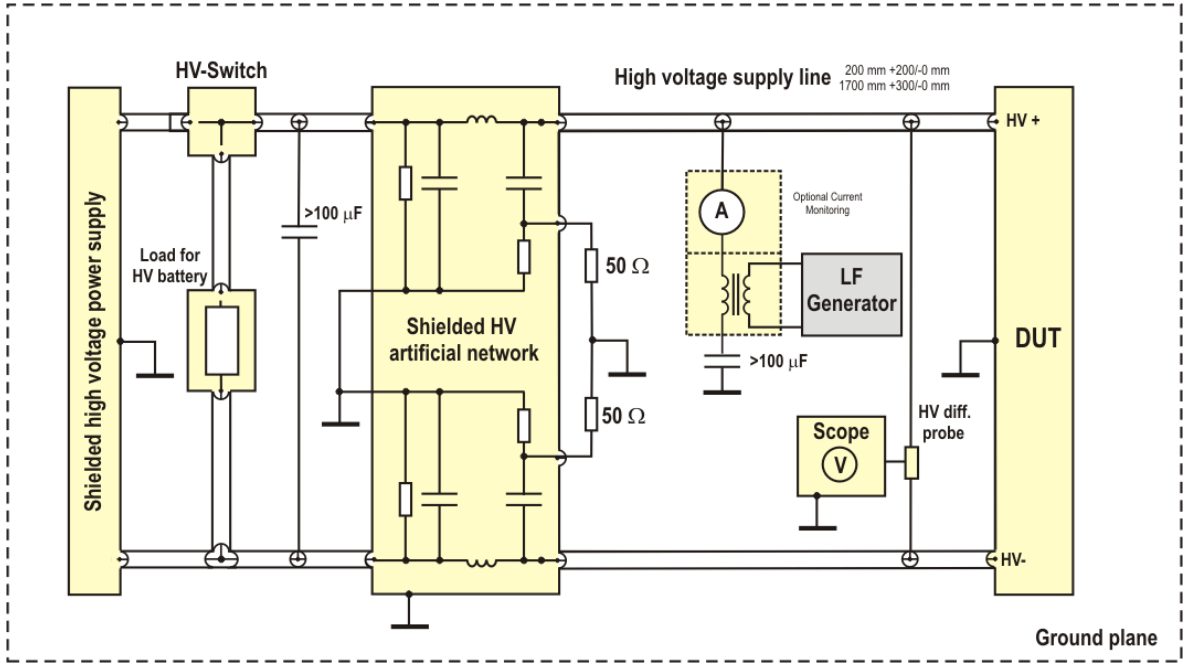

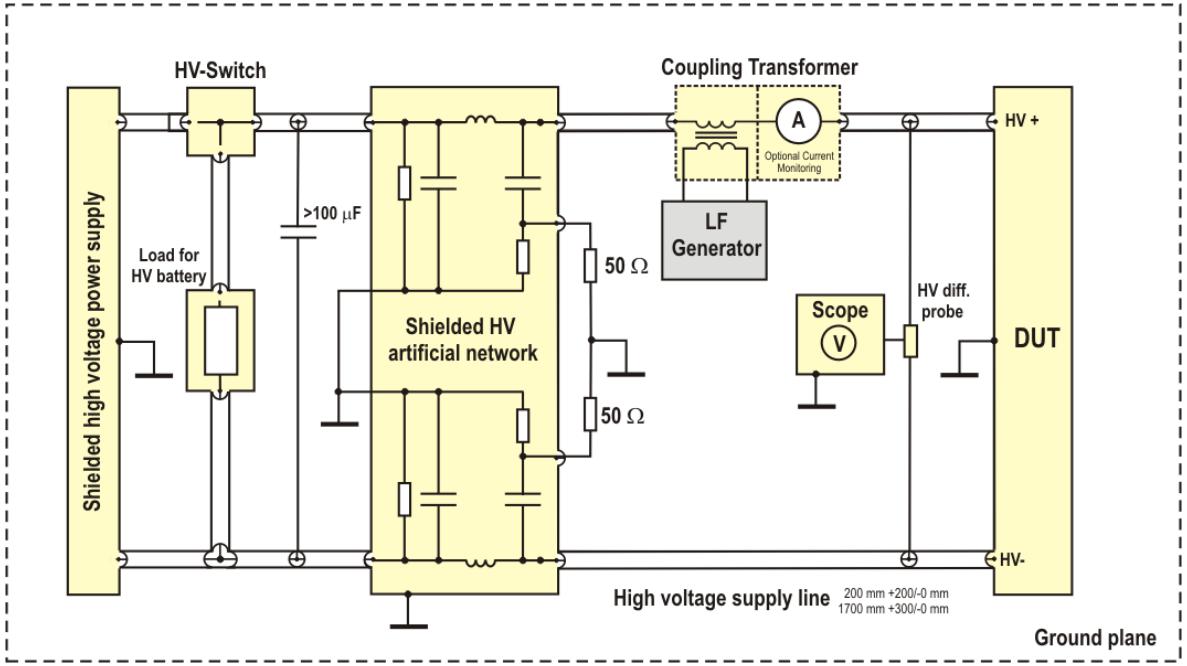

Line to Ground

TRANSFORMER COUPLED SINE WAVES

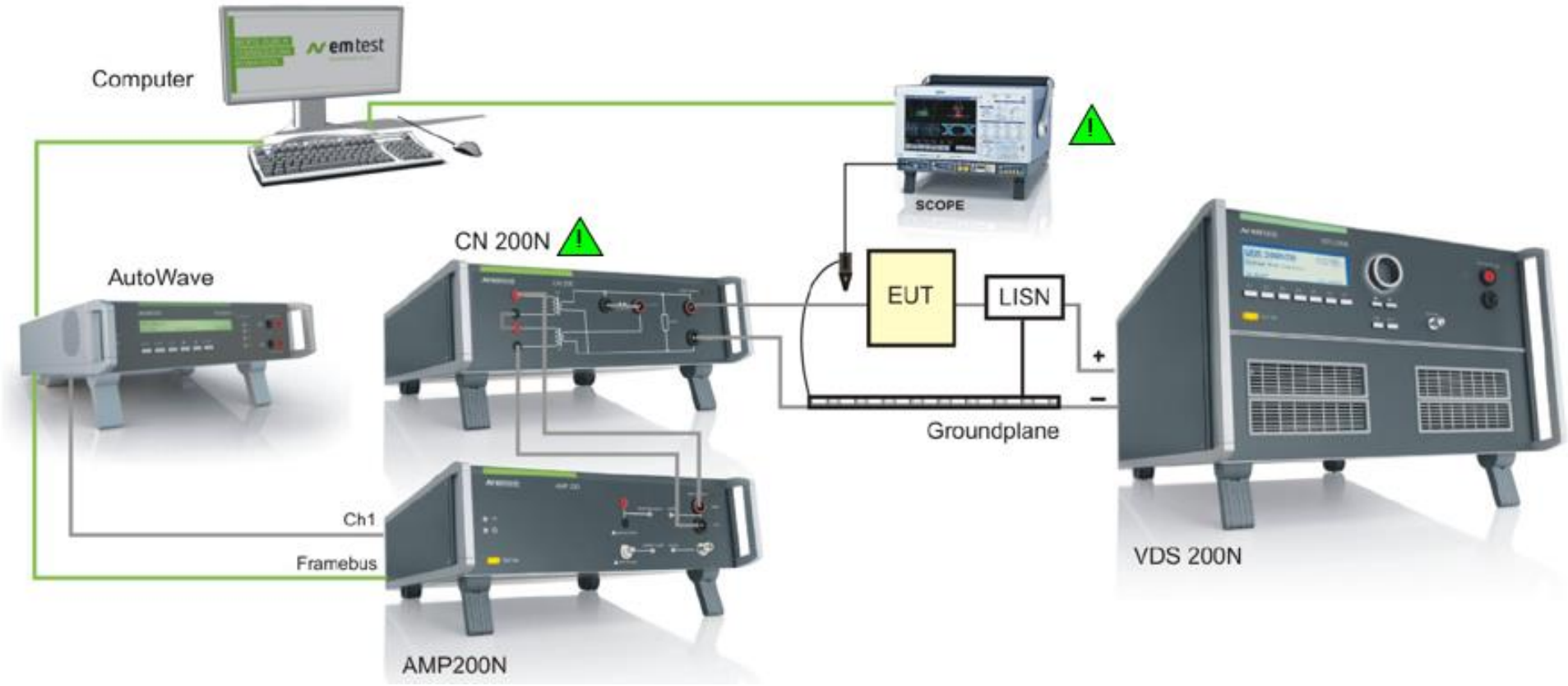

MANY THANKS FOR YOUR ATTENTION

AMETEK CTS Germany GmbH
Lünener Str. 211
59174 Kamen, Germany

Phone: +49 (0) 2307 / 260700
Fax: +49 (0) 2307 / 17050

www.ametek-cts.com

info.cts@ametek.de