VOLTA S.p.A.

Competenza ed entusiasmo per soluzioni tecniche

ECE R10 Rev.5

Basi normative

Alessandro Corniani
aco@volta.it

E/ECE/324/Add.9/Rev.5

- ...altrimenti detta ECE R10 Rev.5... ma cos'è UN/ECE?
  - La Commissione economica per l'Europa delle Nazioni Unite (United Nations Economic Commission for Europe) è una delle cinque commissioni economiche che riportano al Consiglio Economico e Sociale delle Nazioni Unite.
  - Vi aderiscono i paesi Europei ma anche paesi extra-europei

Mutuo riconoscimento

- L’accordo E/ECE/TRANS/505/Rev.2 del 1958 (Amd 1995) opera sul principio dell’approvazione del tipo e il mutuo riconoscimento.
- Firmatari: Italia, Olanda, Germania, Francia, Ungheria, Svezia e Belgio.
- L’approvazione si riconosce da una marcatura E seguita da un numero (paese, 3 per l’Italia) in un cerchio.

Accordo

- Articolo 1, Paragrafo 1
  - The Contracting Parties shall establish [...] Regulations for wheeled vehicles, equipment and parts which can be fitted and/or be used on wheeled vehicles.
  - The term "wheeled vehicles, equipment and parts" shall include any wheeled vehicles, equipment and parts whose characteristics have a bearing on road safety, protection of the environment and energy saving.

Accordo

- Articolo 1, Paragrafo 2
  - The Regulation shall cover the following:
    - (a) Wheeled vehicles, equipment or parts concerned;
    - (b) Technical requirements, which if necessary may include alternatives;
    - (c) Test methods by which any performance requirements are to be demonstrated;
    - (d) Conditions for granting type approval and their reciprocal recognition including any approval markings and conditions for ensuring conformity of production.
    - (e) The date(s) on which the Regulation enters into force.

E/ECE/324/Add.9/Rev.5

- ...altrimenti detta ECE R10 Rev.5 o Regolamento n. 10 della Commissione economica per l'Europa delle Nazioni Unite (UN/ECE) — Disposizioni uniformi relative all'omologazione di veicoli relativamente alla loro compatibilità elettromagnetica

Contenuto

1. Campo di applicazione
2. Definizioni
3. Domanda di omologazione
4. Omologazione
5. Marcature
6. Specifiche
7. Modifica e estensione dell'omologazione di un veicolo in seguito all'aggiunta o alla sostituzione di un'UEE
8. Conformità della produzione
9. Sanzioni in caso di non conformità della produzione
10. Cessazione definitiva della produzione
11. Modifica o estensione dell'omologazione di un veicolo o di un'UEE
12. Disposizioni transitorie
13. Denominazioni e indirizzi dei servizi tecnici incaricati di eseguire le prove di omologazione e dei servizi amministrativi

Supplementi ed Annex con riferimenti normativi, limiti, informazioni amministrative, note e referenze...

VOLTA S.p.A.

Definizioni

- 2.8 “**E**lectrical/electronic **S**ub-**A**ssembly” (ESA) means an electrical and/or electronic device or set(s) of devices intended to be part of a vehicle, together with any associated electrical connections and wiring, which performs one or more specialized functions [...].
- 2.13 “REESS” means the **Re**chargeable **E**nergy **S**torage **S**ystem that provides electric energy for electric propulsion of the vehicle.

Annex

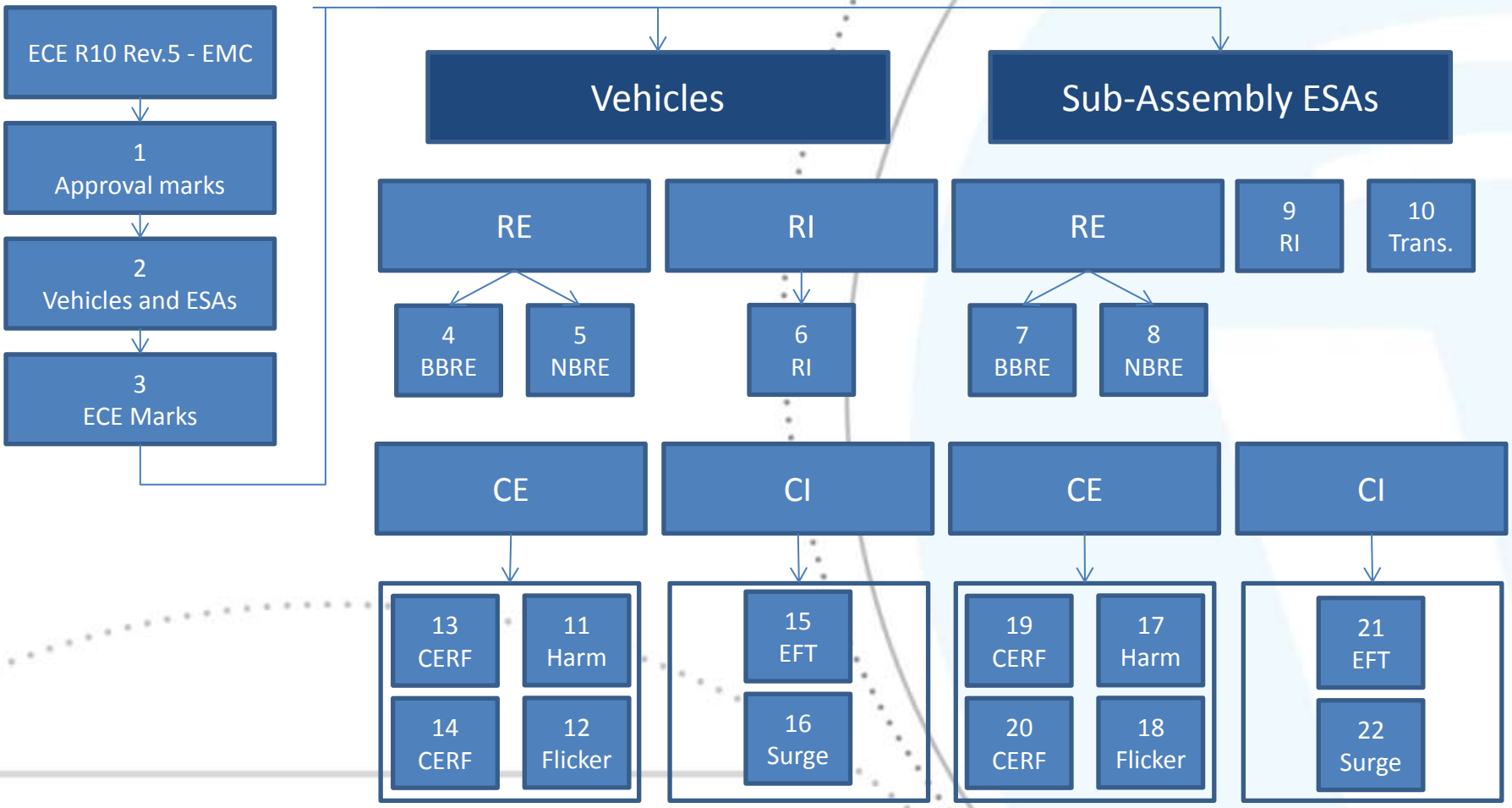
ECE R10 Rev.5 - EMC
1
Approval marks
2
Vehicles and ESAs
3
ECE Marks
Vehicles
Sub-Assembly ESAs
RE
RI
RE
9
RI
10
Trans.
4
BBRE
5
NBRE
6
RI
7
BBRE
8
NBRE
CE
CI
CE
CI
13
CERF
11
Harm
14
CERF
12
Flicker
15
EFT
16
Surge
19
CERF
17
Harm
20
CERF
18
Flicker
21
EFT
22
Surge

Annex

Annex	Description
1	Examples of approval marks
2A	Information document for type approval of a vehicle with respect to electromagnetic compatibility
2B	Information document for type approval of an electric/electronic sub-assembly with respect to electromagnetic compatibility
3A	Communication concerning the approval or extension or refusal or withdrawal of approval or production definitively discontinued of a type of vehicle/component/separate technical unit with regard to Regulation No. 10
3B	3B Communication concerning the approval or extension or refusal or withdrawal of approval or production definitively discontinued of a type of electrical/electronic sub-assembly with regard to Regulation No. 10
4	Method of measurement of radiated broadband electromagnetic emissions from vehicles

VOLTA S.p.A.

Annex

Annex	Description
5	Method of measurement of radiated narrowband electromagnetic emissions from vehicles
6	Method of testing for immunity of vehicles to electromagnetic radiation
7	Method of measurement of radiated broadband electromagnetic emissions from electrical/electronic sub-assemblies (ESAs)
8	Method of measurement of radiated narrowband electromagnetic emissions from electrical/electronic sub-assemblies
9	Method(s) of testing for immunity of electrical/electronic sub-assemblies to electromagnetic radiation
10	10 Method(s) of testing for immunity to and emission of transients of electrical/electronic sub-assemblies

VOLTA S.p.A.

Annex

Annex	Description
11	Method(s) of testing for emission of harmonics generated on AC power lines from vehicle
12	Method(s) of testing for emission of voltage changes, voltage fluctuations and flicker on AC power lines from vehicle
13	Method(s) of testing for emission of radiofrequency conducted disturbances on AC or DC power lines from vehicles
14	Method(s) of testing for emission of radiofrequency conducted disturbances on network and telecommunication access from vehicles
15	Method of testing for immunity of vehicles to Electrical Fast Transient/Burst disturbances conducted along AC and DC power lines
16	Method of testing for immunity of vehicles to surges conducted along AC and DC power lines

VOLTA S.p.A.

Annex

Annex	Description
17	Method(s) of testing for emission of harmonics generated on AC power lines from an ESA
18	Method(s) of testing for emission of voltage changes, voltage fluctuations and flicker on AC power lines from an ESA
19	Method(s) of testing for emission of radiofrequency conducted disturbances on AC or DC power lines from an ESA
20	Method(s) of testing for emission of radiofrequency conducted disturbances on network and telecommunication access from an ESA
21	Method of testing for immunity of an ESA to Electrical Fast Transient/Burst disturbances conducted along AC and DC power lines
22	Method of testing for immunity of ESAs to surges conducted along AC and DC power lines

VOLTA S.p.A.

IEC standards for vehicles

- IEC / EN 61851-1 Ed.3.0
  - Electric vehicle conductive charging system - Part 1: General requirements
- IEC / EN 61851-21 Ed.2.0
  - Electric vehicle conductive charging system - Part 21: Electric vehicle requirements for conductive connection to an a.c./d.c. supply
- IEC / EN 61851-22
  - Electric vehicle conductive charging system - Part 22: AC electric vehicle charging station
- IEC / EN 61851-23
  - Electric vehicle conductive charging system - Part 23: DC electric vehicle charging station
- IEC / EN 61851-24
  - Electric vehicle conductive charging system - Part 24: Digital communication between a d.c. EV charging station and an electric vehicle for control of d.c. charging

VOLTA S.p.A.

IEC 61851-21 Ed.2.0

Tabelle 1 – Störfestigkeitsprüfungen

	Umwelt-Phänomene		Test spez.	Einheiten	Basic Standards	Bemerkungen	Prüf kriterium
1.1	Electrost. Discharge	CD	± 8	kV (charge voltage)	ISO 10605.2: 2008	See test procedure in ISO 10605.2:2008. „Vehicle test method“	B
		Air discharge	± 15	kV (charge voltage)			B
1.2	Radio-frequency electromagnetic field. Amplitude modulated		20 to 800 30 80	MHz V/m (r.m.s.) % AM (1 kHz)	ISO 11451-2: 2005	Vehicle test Vert. polarisation of the E field [a] NOTE 1& 4	A
1.3	Radio-frequency electromagnetic field. Pulse modulated		800 to 2000 25 t_{on}: 577 T: 4600	MHz V/m (r.m.s.) µs µs	ISO 11451-2: 2005	Vehicle test Vert. polarisation of the E field [a] NOTE 1	A
1.4	Fast transients (a.c. or d.c. power lines)		± 2 5/50 5	kV (open circuit test voltage) Tr/Th ns Repetition frequency kHz	IEC 61000-4-4: 2004	NOTE 2	B
1.5	Fast transients (pilot line)		± 1 5/50 5	kV (open circuit test voltage) Tr/Th ns Repetition frequency kHz	IEC 61000-4-4: 2004	Capacative clamp is used.	B
1.6	Surge (a.c. power lines) line-to-earth line-to line		1.2/50 (8/20) ± 2 ± 1	Tr/Th µs kV (open circuit test voltage) kV (open circuit test voltage)	IEC 61000-4-5: 2005	Each surge shall be applied 5 times at 1mn (or less, minimum 10 s) interval for each of the following angles: 0, 90, 180 and 270°	B
1.7	Surge (d.c. power lines) line-to-earth line-to line		1.2/50 (8/20) ± 0.5 ± 0.5	Tr/Th µs kV (open circuit test voltage) kV (open circuit test voltage)	IEC 61000-4-5: 2005	Each surge shall be applied 5 times at 1min (or less, minimum 10 s) interval.	B

VOLTA S.p.A.

IEC 61851-21 Ed.2.0

The Standard requires Power Fail tests acc. IEC 61000-4-11 and Harmonic Immunity acc. IEC 61000-4-13

1.8	Supply voltage harmonics	Class 2 in Tab 1to3 of IEC 61000-4-13		IEC 61000-4-13: 2009		B
1.9	Voltage dips	0 1	% residual voltage Cycle	IEC 61000-4-11	Voltage shift at zero crossing NOTE 3	B
		40 10/12 at 50/60Hz	70 25/30 at 50/60Hz % residual voltage Cycle			C
1.10	Voltage interruptions	0 250/300 at 50/60Hz	% residual voltage Cycle	IEC 61000-4-11	Voltage shift at zero crossing NOTE 3	C See Note 4
1.11	BCI Amplitude modulated	20 to 200 60 80	MHz mA (r.m.s) % AM (1 kHz)	ISO 11452-4: 2005 + Amd 2009	Stand alone test Vert. polarisation of the E field [a] NOTE 1 & 4	A
1.12	Radio-frequency electromagnetic field. Amplitude modulated.	200 to 800 30 80	MHz V/m (r.m.s) % AM (1 kHz)	ISO 11452-2: 2004	Stand alone test Vert. polarisation of the E field [a] NOTE 1 & 4	A
1.13	Radio-frequency electromagnetic field. Pulse modulated.	800 to 2000 25 t_{on}: 577 T: 4600	MHz V/m (r.m.s) µs µs	ISO 11452-2: 2004	Stand alone test Vert. polarisation of the E field [a] NOTE 1	A

NOTE 1 The articles mains network to be used for this test on vehicle is defined in CISPR 16-1-2 Clause 4.3.
NOTE 2 When the CDN network cannot be used on a.c. or d.c. power lines, the capacitive coupling clamp defined in 6.3 of IEC 61000-4-4:2004, may be used
NOTE 3 Applicable only to input ports
NOTE 4 AM is peak conservation according to ISO 11451-1 or ISO 11452-1

* The field strength shall be 30 V/m rms in over 90% of the 20 to 2000 MHz frequency range and a minimum of 25 V/m over the whole 20 to 2000 MHz frequenccy range.

VOLTA S.p.A.

ECE R10 Rev.5

- Chapter 7
- Additional specifications in the configuration "REESS charging mode coupled to the power grid"

Emissioni
- Armoniche
- Flicker
- RF Condotte

Immunità
- Burst
- Surge
- Power fail

VOLTA S.p.A.

Emissioni irradiate

- Chapter 7.2 – Annex 4 – Vehicle
- Chapter 7.10 – Annex 7 – ESA
  - Radiated broadband electromagnetic emissions
  - Test method: CISPR 12 30MHz..1GHz
  - Limits: CISPR 12

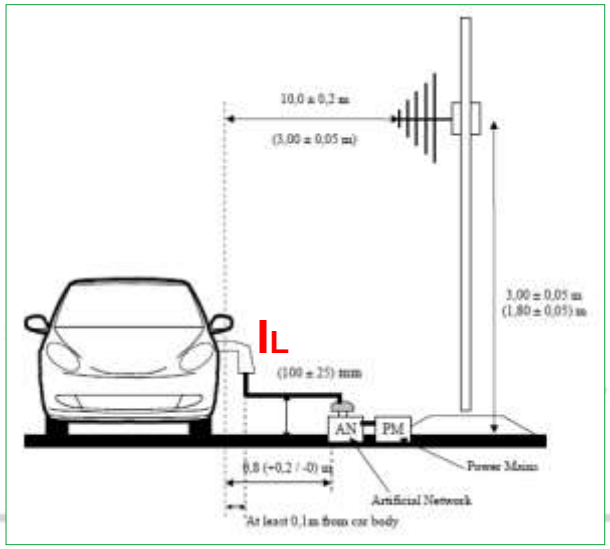

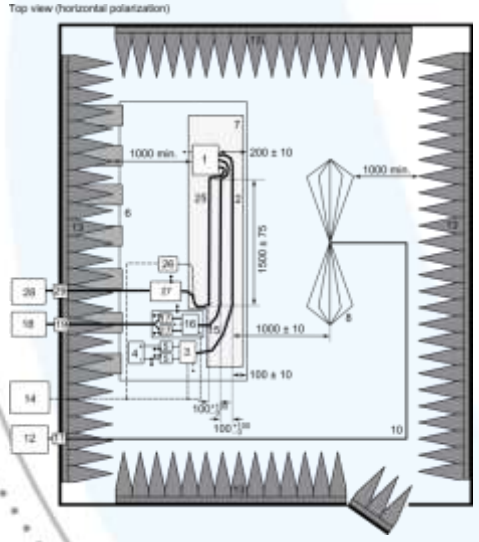

Armoniche, emissioni condotte

- Chapter 7.3 – Annex 11 – Vehicle
- Chapter 7.11 – Annex 17 – ESA
  - Harmonics emissions on AC power lines
  - Test method: IEC 61000-3-2, IEC 61000-3-12

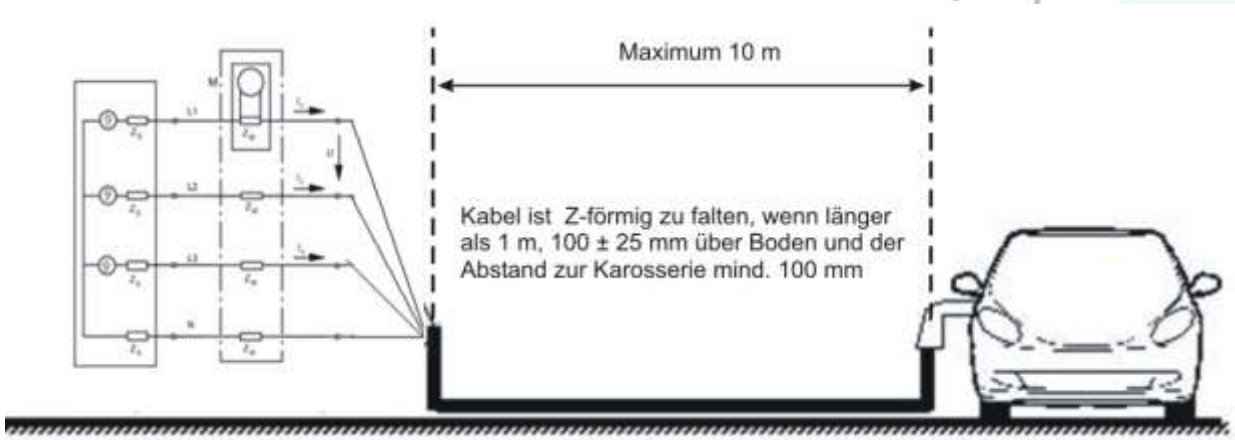

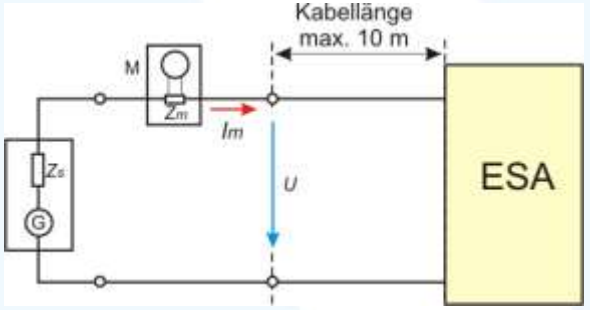

Armoniche, emissioni condotte

- Per sistemi di carica di veicoli elettrici con correnti nominali inferiori a 16A, si applicano i limiti di IEC 61000-3-2 Class A
- Per sistemi di carica di veicoli elettrici con correnti nominali inferiori a 16A, si applicano i limiti di IEC 61000-3-12

Table 2 – Maximum harmonic currents (Nominal current ≤16A /Phase)	
Harmonics n	Limit of harmonic current [A]
Odd Harmonics	
3	2,3
5	1,14
7	0,77
9	0,40
11	0,33
13	0,21
15 ≤ n ≤ 39	0,15x15/n
Even Harmonics	
2	1,08
4	0,43
6	0,30
8 ≤ n ≤ 40	0,23x8/n

Flicker

- Chapter 7.4 – Annex 12 – Vehicle
- Chapter 7.12 – Annex 18 – ESA
  - Emissions of voltage changes, voltage fluctuations and flicker on AC power lines
  - Test method: IEC 61000-3-3, IEC 61000-3-11

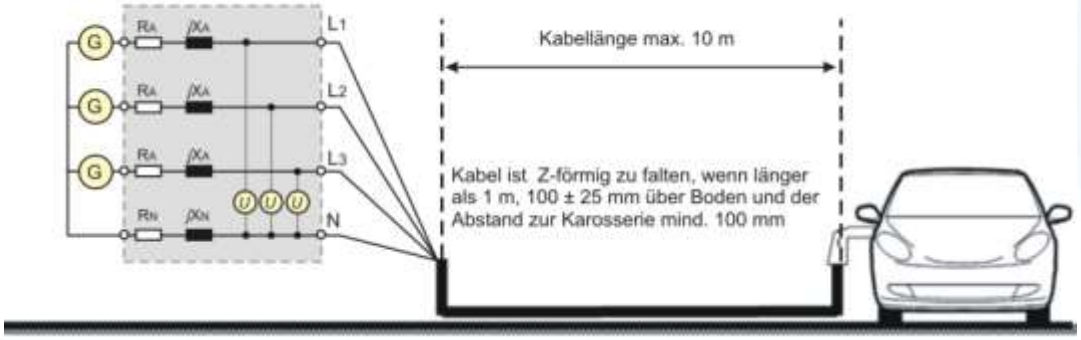

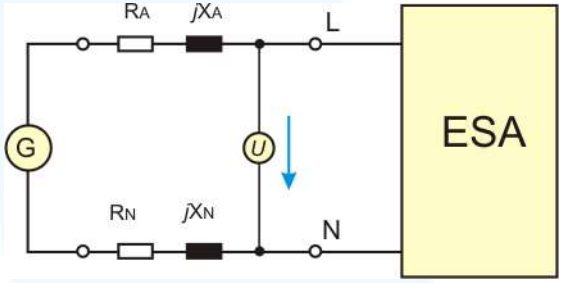

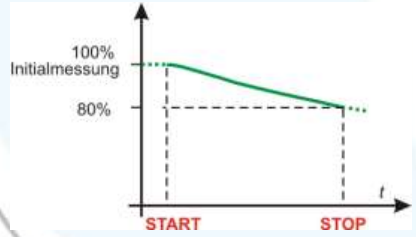

Armoniche e flicker – 100A

Sorgente AC pulita	
Voltage	±2%
Frequency	±0.5%
Phase Angle	120°±1.5°
Peak	1.40..1.42 Vrms 87°..93° zero cr.
Harmonics	3°: 0.9% 5°: 0.4% 7°: 0.3% 9°: 0.2% Odd: 0.2% 11° to 40°: 0.1%

VOLTA S.p.A.

Armoniche e flicker

VOLTA S.p.A.

Emissioni condotte

- Chapter 7.5 – Annex 13 – Vehicle
- Chapter 7.13 – Annex 19 – ESA
  - Emission of radiofrequency conducted disturbances on AC or DC power lines
  - Test method: CISPR 16-2-1
  - Limits: IEC 61000-6-3 Tab.7 (AC) o Tab.8 (DC)

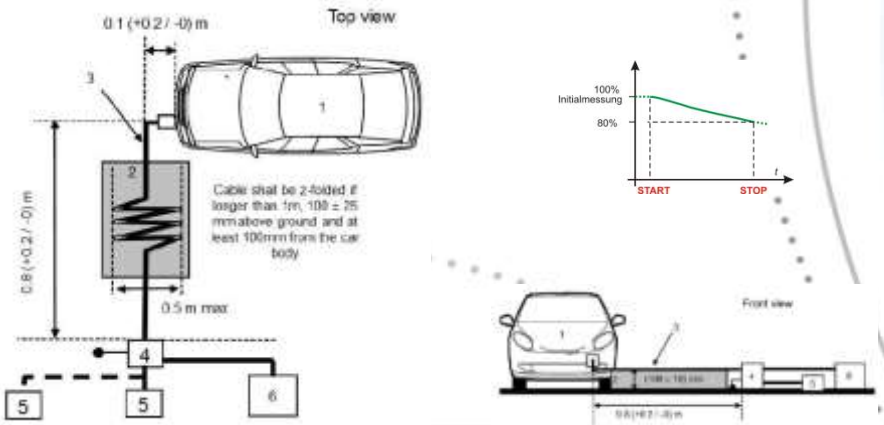

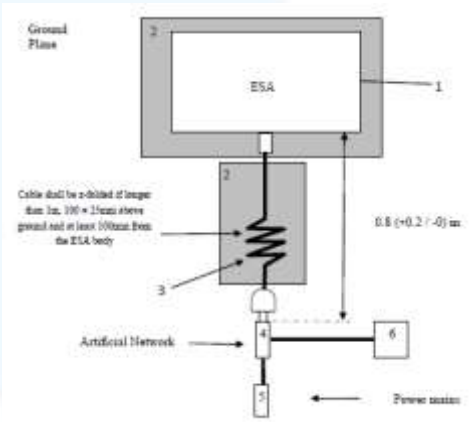

Emissioni condotte

- Chapter 7.6 – Annex 14 – Vehicle
- Chapter 7.14 – Annex 20 – ESA
  - Emission of radiofrequency conducted disturbances on network and telecommunication access
  - Test method: CISPR 22
  - Limits: IEC 61000-6-3 Quasi-peak e Average

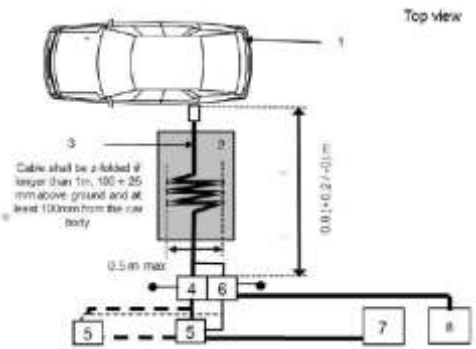

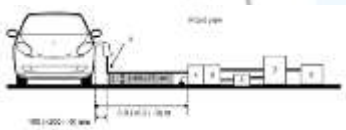

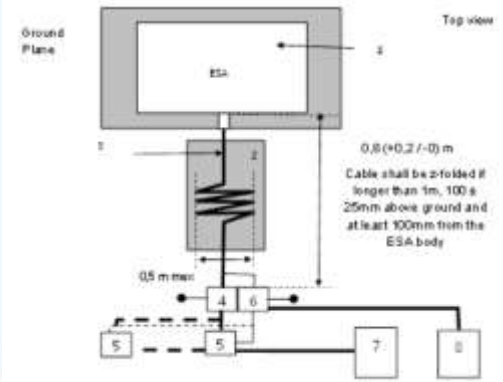

Immunità irradiata

- Chapter 7.7 – Annex 6 – Vehicle
- Chapter 7.18 – Annex 9 – ESA
  - Immunity to electromagnetic radiation
  - Test method: ISO 11452-2 / ISO 11452-3, -4, -5 (ESA)
  - Test: in carica e non in carica

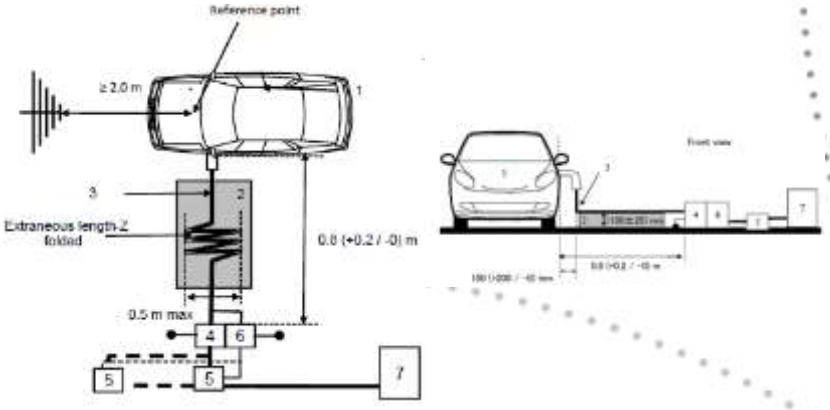

Burst

- Chapter 7.8 – Annex 15 – Vehicle
- Chapter 7.15 – Annex 21 – ESA
  - Immunity to EFT / burst along AC / DC power lines
  - Test method: IEC 61000-4-4
  - Livello: ±2kV 1min
  - Test: in carica

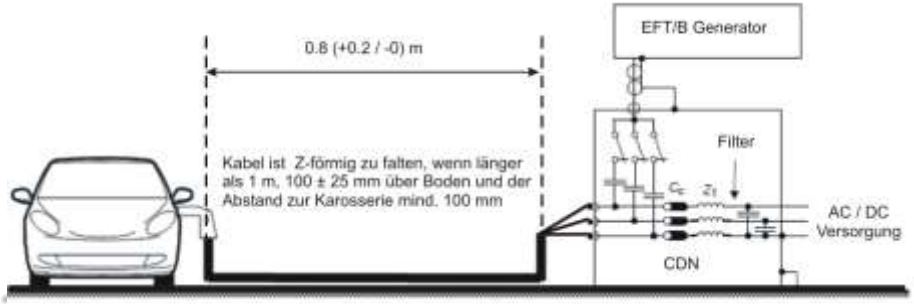

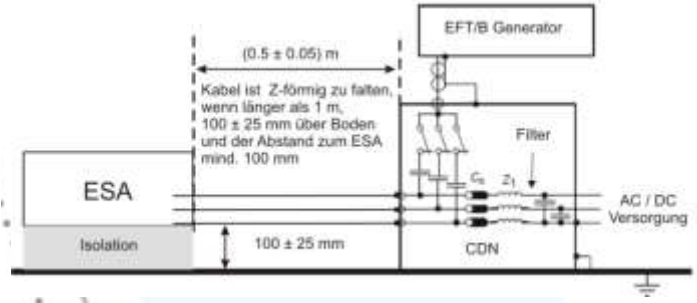

Surge

- Chapter 7.9 – Annex 16 – Vehicle
- Chapter 7.16 – Annex 22 – ESA
  - Immunity to surge along AC / DC power lines
  - Test method: IEC 61000-4-5
  - Livello: ±1kV (L-L), ±2kV (L-PE), ±500V (DC)
  - Test: in carica

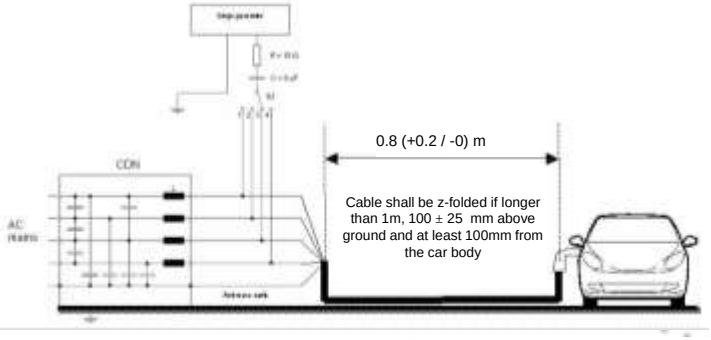

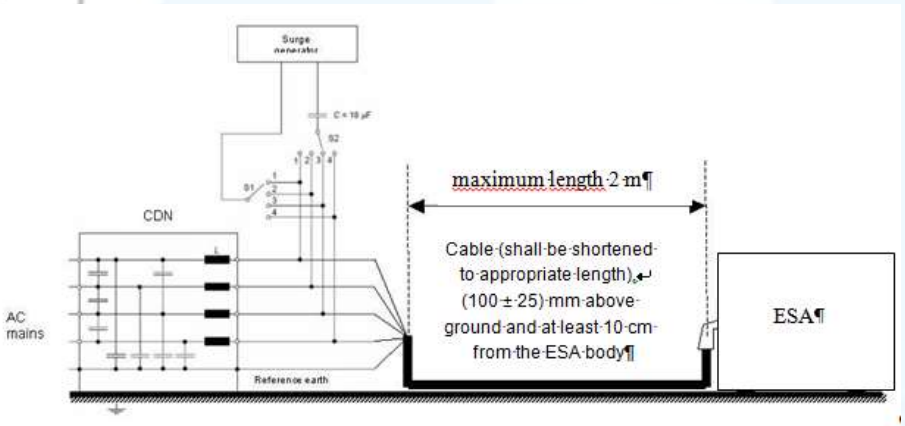

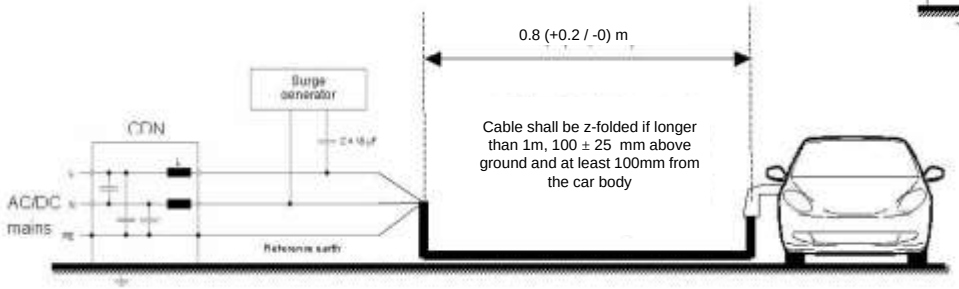

Burst e surge

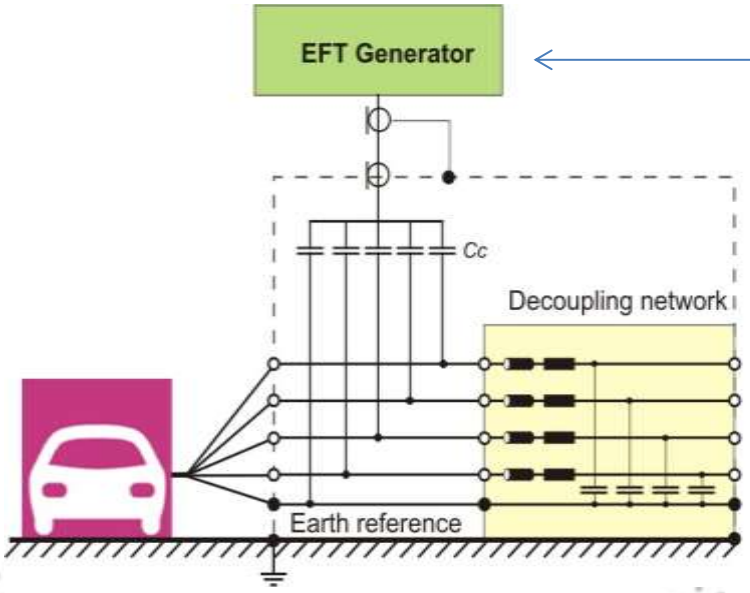

VOLTA S.p.A.

Competenza ed entusiasmo per soluzioni tecniche

Grazie per l'attenzione!